Part C2 - **Measurement of the Propagation Velocity of Astronomical Light**

Franc Rozman

Abstract

Astronomical spectroscopy measures wavelengths, spectral shifts, and line profiles with very high precision, but the local propagation velocity of the incoming astronomical light is normally not treated as an independent observable. In standard electrodynamics, the relation

$$u = c$$

is adopted for local vacuum propagation, so that frequency and wavelength are connected by

$$f = \frac{c}{\lambda}$$

The present work proposes a differential Fabry–Pérot experiment in which the propagation velocity u of already-arriving astronomical light is left open until after the measurement.

The method compares two components of the same incoming stellar radiation. The direct component retains the incoming wavelength

$$\lambda_{\mathrm{dir}}$$

while a second component passes through a transmission grating and is observed in the zero diffraction order. Within the reconstruction model developed in Part C1, the grating produces a locally reconstructed wave that propagates with velocity c relative to the stationary grating while preserving the temporal frequency of the incoming radiation. Its wavelength

$$\lambda_{\mathrm{gr}}$$

therefore provides the frequency reference, and the incoming propagation velocity follows from

$$\frac{u}{c} = \frac{\lambda_{\mathrm{dir}}}{\lambda_{\mathrm{gr}}}$$

The proposed reference instrument uses a fixed symmetric entrance-pupil assembly on a telescope of approximately 260 mm aperture. Eight commercial transmission gratings of approximately 50 × 50 mm are distributed around a central obscuration, producing direct and zero-order grating components simultaneously. The usable annular pupil is divided almost equally between direct and grating-covered regions. A groove density near 300 grooves mm^{-1} is sufficient to move the higher diffraction orders well away from the central Fabry–Pérot field while retaining the zero order on the common optical axis.

Groombridge 1830 is proposed as the primary target. Its approaching radial velocity of approximately

$$v_r \approx -98\ \mathrm{km\ s^{-1}}$$

corresponds within the present model to a predicted wavelength ratio of approximately

$$K \approx 1.000327$$

and to a direct–grating separation near 630 nm of approximately

$$\Delta\lambda \approx 0.206\ \mathrm{nm}$$

The expected separation is substantially larger than two-component separations already resolved in astronomical Fabry–Pérot measurements.

The experiment has a clear discriminating outcome. If

$$\lambda_{\mathrm{dir}} = \lambda_{\mathrm{gr}}$$

within experimental uncertainty, then

$$u = c$$

within the reconstruction model. A reproducible non-zero difference would instead give

$$u \neq c$$

and would require a reconsideration of the relation between frequency, wavelength, propagation velocity, and the interpretation of astronomical Doppler shifts.

The principal contribution of the proposed experiment is therefore not merely a new spectroscopic configuration, but a change in experimental logic: the propagation velocity of incoming astronomical light is converted from a quantity normally supplied by theory into a directly testable wavelength ratio.

1. Introduction

Astronomy measures the properties of light with extraordinary precision. Spectral wavelengths, frequency shifts, line profiles, arrival times, and radial velocities can be determined with high accuracy. Nevertheless, one quantity is normally not treated as an independent observable when astronomical light reaches the telescope: its local propagation velocity.

The basic relation

$$u = f\lambda$$

contains three physical quantities: propagation velocity u, frequency f, and wavelength λ. In standard electrodynamics, vacuum propagation is described by

$$u = c$$

and therefore frequency and wavelength are related by

$$f = \frac{c}{\lambda}$$

This framework is internally consistent and is supported by a broad range of experiments. However, it also means that astronomical

spectroscopy normally does not determine u independently from separate measurements of f and λ. Once u=c is adopted, measurement of one of the remaining quantities determines the other through the same relation.

Astronomical observations can place stringent constraints on the propagation of light through timing, dispersion, or comparisons between different signals. These methods are important, but they address a different experimental question. They do not normally determine the local propagation velocity of the already-arriving astronomical wave by independently establishing its frequency and spatial wavelength at the measuring instrument.

The present work asks whether this missing measurement can be made.

The difficulty is not primarily the precision of astronomical spectroscopy. Modern optical instruments can measure very small wavelength differences. The more fundamental problem is how to obtain an independent frequency reference without already using the relation $f = c/\lambda$ for the incoming astronomical wave.

Part C1 introduced a model in which interaction with a diffraction grating can reconstruct the spatial structure of an electromagnetic wave. Within that model, the reconstructed wave propagates locally relative to the stationary grating with velocity c, while retaining the temporal interaction frequency of the incoming radiation. This provides the basis for a differential experiment.

The incoming stellar light is divided into two components. One component reaches the measuring system directly and retains the spatial wavelength of the incoming astronomical wave,

$$\lambda_{\mathrm{dir}}$$

while the second passes through a diffraction grating and is observed in the zero diffraction order, giving the reconstructed wavelength

$$\lambda_{\mathrm{gr}}$$

Within the reconstruction hypothesis,

$$f = \frac{c}{\lambda_{\mathrm{gr}}}$$

while the incoming direct component satisfies

$$u = f\lambda_{\mathrm{dir}}$$

Combining the two relations gives

$$\frac{u}{c} = \frac{\lambda_{\mathrm{dir}}}{\lambda_{\mathrm{gr}}}$$

Thus the propagation velocity of the incoming astronomical light is converted into a differential wavelength measurement.

The principal purpose of this paper is to examine whether such a measurement is experimentally feasible.

The proposed implementation uses a fixed entrance-pupil assembly in which direct and grating-covered regions are distributed symmetrically around the optical axis. Both components are generated simultaneously from the same incoming stellar wavefront and are measured by the same Fabry–Pérot interferometer. This removes the need to compare different telescopes, different interferometers, or measurements taken at substantially different times.

A practical reference design is considered using a telescope aperture of approximately 260 mm and eight fixed commercial transmission gratings of approximately 50 × 50 mm. The grating and direct-transmission regions occupy nearly equal areas of the usable annular pupil. Transmission gratings with a groove density near 300 grooves $mm(^{-1}$ provide sufficient angular separation of the higher diffraction orders while leaving the zero order on the common optical axis.

Groombridge 1830 is selected as a favourable initial target because of its relatively large approaching radial velocity. Within the present model, its motion corresponds to a predicted

wavelength separation near 630 nm of approximately

$$\Delta\lambda \approx 0.206\,\mathrm{nm}$$

between the direct and reconstructed components. This is not an extremely small displacement compared with the resolving capability demonstrated by astronomical Fabry–Pérot observations.

The experiment therefore has a simple discriminating outcome. If the direct and reconstructed components have the same wavelength,

$$\lambda_{\mathrm{dir}} = \lambda_{\mathrm{gr}}$$

then

$$u = c$$

within the experimental uncertainty.

If a reproducible non-zero difference is found,

$$\lambda_{\mathrm{dir}} \neq \lambda_{\mathrm{gr}}$$

the measured wavelength ratio directly determines u/c within the reconstruction model.

The importance of such a result would extend beyond the measurement technique itself. A null result would provide a direct local test of the standard expectation for astronomical light arriving at the telescope. A non-zero result would require reconsideration of how frequency, wavelength, propagation velocity, and astronomical Doppler shifts are related.

The central objective is therefore not merely to improve astronomical spectroscopy. It is to make the propagation velocity of incoming astronomical light an independent experimental quantity and to determine whether a practical measurement of that quantity can be performed with existing optical technology.

2. Why the Propagation Velocity of Astronomical Light Is Not Normally an Independent Observable

The propagation velocity of astronomical light occupies an unusual position in observational physics. Wavelengths, spectral shifts, line profiles, and arrival times are measured directly, often with extremely high precision. The local propagation velocity of the radiation entering the telescope, however, is normally not determined as an independent experimental quantity.

The reason is largely built into the conventional description of electromagnetic radiation in vacuum. Once

$$u = c$$

is adopted, frequency and wavelength are connected by

$$f = \frac{c}{\lambda}$$

and there is no need, within that framework, to determine u separately.

This is different from using the more general relation

$$u = f\lambda$$

as an experimental equation containing three independently meaningful quantities. To determine an unknown u from this relation, both f and λ must be established independently.

2.1 What astronomical spectroscopy normally determines

An astronomical spectrometer measures the spectral position of incoming radiation relative to a calibrated wavelength or frequency scale. From the observed displacement of a spectral line, quantities such as redshift or radial velocity can then be inferred.

In the conventional interpretation, the propagation velocity of the received radiation is not another unknown to be solved for. The observed spectral shift is interpreted while retaining

$$u = c$$

for local propagation in vacuum.

Consequently, a measured wavelength does not provide an independent measurement of propagation velocity. If a frequency is assigned from that wavelength through

$$f = \frac{c}{\lambda}$$

then substituting the two quantities into

$$u = f\lambda$$

necessarily returns c. The result is mathematically correct, but it is not an independent experimental determination of u, because c was already used to determine f.

The same issue appears in reverse if frequency is measured and wavelength is subsequently calculated from c/f.

2.2 Why astronomical timing is a different measurement

Astronomical observations can provide strong constraints on light propagation through arrival-time measurements. Pulsed sources, transients, gravitational-wave events, and observations at different photon energies can test whether different signals propagate with measurably different velocities.

Such experiments are highly important, but they answer a somewhat different question.

A direct one-way time-of-flight determination would require knowledge of both the propagation distance and the corresponding emission and reception times:

$$u = \frac{L}{t_{\mathrm{rec}} - t_{\mathrm{em}}}$$

For ordinary continuously arriving stellar light, the individual emission time t_{em} is generally not independently known with the precision required to determine the absolute propagation velocity in this way.

Astronomical timing measurements can therefore test differences in propagation times extremely sensitively, but they do not normally provide a local measurement of the velocity of the particular wave entering the telescope.

The distinction is important:

propagation over an astronomical path can be constrained from timing, while the local u of the arriving electromagnetic wave is normally not treated as a separate spectroscopic observable.

2.3 The missing independent measurement

The fundamental difficulty is therefore not that the relation

$$u = f\lambda$$

is unknown. The difficulty is obtaining f and λ independently without first assigning a value to u.

For astronomical radiation arriving at the telescope, an ideal experiment would determine:

$$f_{\mathrm{incoming}}$$

and independently

$$\lambda_{\mathrm{incoming}}$$

and only afterwards calculate

$$u_{\mathrm{incoming}} = f_{\mathrm{incoming}}\lambda_{\mathrm{incoming}}$$

Such a measurement would leave u_{incoming} open as an experimental result.

This is the measurement that is normally absent.

2.4 Why the question matters

Within standard electrodynamics, the expected result of such an experiment is unambiguous:

$$u_{\text{incoming}} = c$$

There is therefore little motivation within the standard framework to introduce an additional experiment merely to recover a quantity already fixed by the theory and supported by extensive terrestrial tests.

This creates an important methodological situation. A prediction can be extremely well established while a particular experimental question remains largely unasked.

The relevant question here is not whether terrestrial experiments support the invariant local vacuum speed c. They do.

The narrower question is:

Can the propagation velocity of astronomical light already arriving at a telescope be determined locally without assigning u=c in the procedure used to obtain its frequency and wavelength?

The present experiment is designed specifically to address this question.

2.5 Converting u into an observable

The reconstruction hypothesis developed in Part C1 provides a possible way to generate the missing independent reference.

The direct component retains the incoming wavelength

$$\lambda_{\text{dir}}$$

while the zero-order grating component is assigned, within the model, a locally reconstructed propagation velocity c while retaining the temporal interaction frequency f.

For the reconstructed component,

$$c = f\lambda_{\text{gr}}$$

so that

$$f = \frac{c}{\lambda_{\text{gr}}}$$

The direct incoming component satisfies

$$u = f\lambda_{\text{dir}}$$

and therefore

$$u = c\frac{\lambda_{\text{dir}}}{\lambda_{\text{gr}}}$$

or

$$\frac{u}{c} = \frac{\lambda_{\text{dir}}}{\lambda_{\text{gr}}}$$

The crucial change is that u is no longer inserted into the analysis before the measurement. It becomes the quantity obtained from the measured wavelength ratio.

The experiment therefore does not primarily propose a new way of measuring a wavelength. Its purpose is to change the logical structure of the measurement: **the propagation velocity of incoming astronomical light is promoted from an assumed parameter to an experimental output.**

That is the central motivation for the experimental design developed in the following sections.

3. Physical Principle of the Measurement

The proposed experiment is based on comparing two components of the same incoming astronomical radiation under different local optical conditions.

One component reaches the measuring system without passing through a diffraction grating. This is the direct component, with wavelength

$$\lambda_{\text{dir}}$$

Its propagation velocity is denoted by

u

and its temporal frequency by

f

so that

$$u = f\lambda_{\mathrm{dir}}$$

The experiment does not assume in advance that

u = c

for this incoming component.

The second component is produced by passing part of the same astronomical radiation through a diffraction grating and observing the zero diffraction order. Its measured wavelength is

$$\lambda_{\mathrm{gr}}$$

Within the reconstruction model developed in Part C1, the grating interaction locally reconstructs the spatial structure of the wave. The reconstructed component is assumed to propagate relative to the stationary grating with velocity

c

while retaining the temporal interaction frequency of the incoming radiation.

It therefore satisfies

$$c = f\lambda_{\mathrm{gr}}$$

and hence

$$f = \frac{c}{\lambda_{\mathrm{gr}}}$$

The same temporal frequency f is associated with the direct component immediately before reconstruction. Substituting into the direct-wave relation gives

$$u = c\frac{\lambda_{\mathrm{dir}}}{\lambda_{\mathrm{gr}}}$$

or equivalently

$$\frac{u}{c} = \frac{\lambda_{\mathrm{dir}}}{\lambda_{\mathrm{gr}}}$$

It is convenient to define

$$K = \frac{\lambda_{\mathrm{dir}}}{\lambda_{\mathrm{gr}}}$$

so that

u = Kc

The propagation velocity is therefore obtained from a wavelength ratio rather than from an astronomical time-of-flight measurement.

If

K = 1

then

u = c

within the experimental uncertainty.

If

$$K \neq 1$$

then the measured ratio directly determines the deviation of u from c within the present model.

The corresponding differential wavelength is

$$\Delta\lambda = \lambda_{\mathrm{dir}} - \lambda_{\mathrm{gr}}$$

and therefore

$$K = 1 + \frac{\Delta\lambda}{\lambda_{\mathrm{gr}}}$$

For small differences,

$$\frac{u - c}{c} \approx \frac{\Delta\lambda}{\lambda}$$

where λ may be represented by either component wavelength to first order.

The essential feature of the method is that both wavelengths originate from the same incoming radiation. Any spectral shift accumulated before the light reaches the telescope is common to both components. The experiment does not attempt to reconstruct the wavelength emitted at the stellar surface.

Instead, it asks a local question:

Does the wavelength of the direct astronomical wave differ from the wavelength of a locally reconstructed component that retains the same temporal frequency?

The zero diffraction order is particularly suitable because it remains on the nominal optical axis. The direct and reconstructed components can therefore continue through the same downstream optical system and enter the same Fabry–Pérot interferometer.

The experiment thus reduces the determination of the incoming propagation velocity to three experimentally accessible quantities:

$$\lambda_{\mathrm{dir}}$$

$$\lambda_{\mathrm{gr}}$$

and

$$\Delta\lambda$$

with

$$u = c\frac{\lambda_{\mathrm{dir}}}{\lambda_{\mathrm{gr}}}$$

The following sections examine whether these two components can be generated simultaneously and measured with sufficient precision in a practical astronomical instrument.

4. Experimental Concept

The experimental concept is deliberately simple: the same incoming stellar wavefront is divided into two optical components before entering a single Fabry–Pérot interferometer.

One part of the telescope entrance pupil transmits the astronomical light directly. The complementary part contains transmission gratings and produces the zero-order reconstructed component described in Section 3.

The two components are therefore generated simultaneously from the same source and at the same time.

The direct component carries the wavelength

$$\lambda_{\mathrm{dir}}$$

while the grating-covered regions produce the zero-order component with wavelength

$$\lambda_{\mathrm{gr}}$$

Both components continue along the nominal optical axis and enter the same downstream optical system.

This is the central experimental advantage of the method.

The measurement does not compare two telescopes, two spectrometers, or two observations taken at different times. Instead, the direct and reconstructed components are recorded simultaneously by the same Fabry–Pérot interferometer and detector.

The observed signal may therefore be written schematically as

$$S_{\mathrm{mix}}(\lambda) = S_{\mathrm{dir}}(\lambda) + S_{\mathrm{gr}}(\lambda)$$

If

$$\lambda_{\mathrm{dir}} = \lambda_{\mathrm{gr}}$$

the two contributions coincide spectrally and the experiment gives a null result.

If

$$\lambda_{\mathrm{dir}} \neq \lambda_{\mathrm{gr}}$$

the Fabry–Pérot profile contains two displaced components whose separation is

$$\Delta\lambda = \lambda_{\mathrm{dir}} - \lambda_{\mathrm{gr}}$$

and whose wavelength ratio determines

$$\frac{u}{c} = \frac{\lambda_{\mathrm{dir}}}{\lambda_{\mathrm{gr}}}$$

The primary measurement is therefore simultaneous and differential.

4.1 Entrance-pupil division

The telescope entrance pupil is divided into two interleaved regions.

The first region is optically clear and produces the direct component.

The second region is covered by transmission gratings and produces the zero-order reconstructed component.

A central part of the pupil is blocked so that both direct and grating regions occupy approximately the same radial range of the telescope aperture.

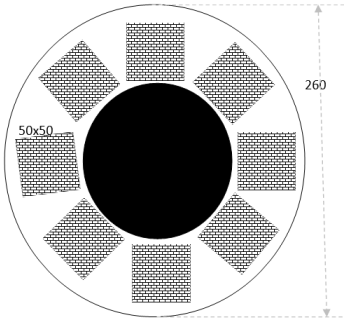

Figure 1. Reference entrance-pupil configuration. *The 260 mm telescope aperture contains eight fixed 50 × 50 mm transmission gratings arranged symmetrically around a central obscuration of approximately 130 mm diameter. The remaining open regions transmit the direct component. The geometry provides nearly equal grating-covered and direct-transmission areas within the usable annular pupil.This annular geometry reduces systematic differences in downstream optical propagation between the two components.*

4.2 Common optical path

After the entrance pupil, both components propagate through the same telescope optics and enter the same Fabry–Pérot interferometer.

The zero diffraction order is essential because it remains on the nominal optical axis.

For the grating,

$$d \sin \theta_m = m$$

and for the zero order,

$$m = 0$$

so that

$$\theta_0 = 0$$

The primary direct and grating signals therefore occupy the same central optical field.

Higher diffraction orders are angularly displaced and are not part of the primary measurement.

4.3 Simultaneous measurement

The simultaneous configuration makes slow changes in the instrument largely common to both components.

Changes in Fabry–Pérot spacing, detector gain, atmospheric transmission, or source intensity can affect the measured signal, but they occur during the same exposure for both wavelengths.

The experiment therefore determines primarily a relative separation rather than two independently calibrated absolute wavelengths.

This is particularly important because the predicted observable is

$$\Delta\lambda$$

rather than an absolute stellar wavelength.

4.4 Reference measurements

Although the mixed profile is the primary measurement, separate reference observations are useful for identifying the two components.

A direct-only measurement can be obtained by preventing light from passing through the grating regions.

A grating-only measurement can similarly isolate the zero-order component.

These reference measurements characterize the individual profile shapes and central wavelengths, while the simultaneous configuration provides the principal differential result.

4.5 Practical character of the experiment

The proposed experiment does not require a large observatory-class telescope solely because of photon collection.

The selected target is relatively bright, while the entrance-pupil mask can be constructed from commercially available optical elements.

A practical implementation can therefore be based on a telescope in the approximately 250–260 mm aperture range, combined with several fixed commercial transmission gratings and a high-resolution Fabry–Pérot system.

The following section develops this reference instrument geometry in more detail.

5. Reference Instrument Design

The purpose of the reference design is not to prescribe a unique instrument, but to show that the proposed measurement can be implemented with realistic dimensions and commercially available optical components.

A practical first implementation may use a telescope with an entrance aperture of approximately

$$D = 260\ \mathrm{mm}$$

together with eight fixed transmission gratings, each approximately

$$50 \times 50\ \mathrm{mm}$$

in size.

The entrance pupil is divided into three regions:

$$A_{\mathrm{pupil}} = A_{\mathrm{dir}} + A_{\mathrm{gr}} + A_{\mathrm{blocked}}$$

where A_{dir} is the clear direct-transmission area, A_{gr} is the total grating-covered area, and A_{blocked} is the central obscuration.

5.1 Telescope aperture

For

$$D = 260\ \mathrm{mm}$$

the total entrance-pupil area is

$$A_{\mathrm{pupil}} = \pi\left(\frac{D}{2}\right)^2$$

which gives approximately

$$A_{\mathrm{pupil}} \approx 5.31 \times 10^4\ \mathrm{mm}^2$$

This aperture is large enough to collect a useful stellar signal while remaining well matched to commercially available 50 × 50 mm grating elements.

Using a substantially larger telescope would require a correspondingly larger number of grating elements if most of the collecting area is to remain useful.

5.2 Fixed grating arrangement

The reference configuration contains eight fixed grating elements arranged symmetrically around the optical axis.

Each grating has an area of

$$A_{g,1} = 50 \times 50 = 2500\ \mathrm{mm}^2$$

so that the total grating-covered area is

$$A_{\mathrm{gr}} = 8 \times 2500 = 20000\ \mathrm{mm}^2$$

This corresponds to approximately

$$\frac{A_{\mathrm{gr}}}{A_{\mathrm{pupil}}} \approx 0.377$$

or about 38% of the full entrance aperture.

The gratings remain fixed during the observation.

5.3 Central obscuration and direct-transmission area

The central part of the pupil is blocked so that both the direct and grating-covered regions occupy the same general radial zone of the telescope aperture.

For a central obscuration of approximately

$$D_{\text{blocked}} \approx 130\ \text{mm}$$

the blocked area is

$$A_{\text{blocked}} = \pi\left(\frac{130}{2}\right)^2$$

or approximately

$$A_{\text{blocked}} \approx 1.33 \times 10^4\ \text{mm}^2$$

The remaining clear direct-transmission area is then

$$A_{\text{dir}} = A_{\text{pupil}} - A_{\text{blocked}} - A_{\text{gr}}$$

which gives approximately

$$A_{\text{dir}} \approx 1.98 \times 10^4\ \text{mm}^2$$

Thus the usable annular pupil is divided almost equally between the two optical paths:

$$A_{\text{gr}} \approx A_{\text{dir}}$$

or numerically

$$A_{\text{gr}} : A_{\text{dir}} \approx 1.01 : 1$$

This near 1:1 geometrical division is a useful feature of the reference design.

5.4 Expected intensity ratio

Equal geometrical areas do not necessarily produce equal detected intensities.

The direct signal scales approximately as

$$I_{\text{dir}} \propto T_{\text{dir}} A_{\text{dir}}$$

while the zero-order grating signal scales as

$$I_{\text{gr}} \propto \eta_0 A_{\text{gr}}$$

where T_{dir} is the direct-path transmission and η_0 is the zero-order transmission efficiency of the grating.

Since

$$A_{\text{gr}} \approx A_{\text{dir}}$$

the expected intensity ratio is approximately

$$\frac{I_{\text{gr}}}{I_{\text{dir}}} \approx \frac{\eta_0}{T_{\text{dir}}}$$

and, for a nearly lossless direct path,

$$\frac{I_{\text{gr}}}{I_{\text{dir}}} \approx \eta_0$$

The two peaks therefore need not have equal amplitudes. The principal requirement is that the zero-order grating signal remain sufficiently strong for reliable profile identification and fitting.

5.5 Modular construction

The entrance-pupil mask can be constructed as a rigid modular assembly placed ahead of the telescope aperture.

Its essential properties are:

- eight fixed grating elements,
- clear regions distributed between them,
- a blocked central region,
- approximate radial symmetry,
- direct and grating areas of comparable size.

The mask therefore performs the division of the incoming stellar wavefront before the light enters the common downstream optical system.

The reference dimensions are summarized by

$$D_{\text{telescope}} \approx 260\ \text{mm}$$

$$D_{\text{blocked}} \approx 130\ \text{mm}$$

$$N_{\text{gr}} = 8$$

$$A_{g,1} = 50 \times 50\ \text{mm}^2$$

and

$$A_{\text{gr}} \approx A_{\text{dir}} \approx 2.0 \times 10^4\ \text{mm}^2$$

This configuration shows that the proposed measurement does not require a custom large-aperture diffraction element. It can be

constructed from a moderate-size telescope and a small number of commercially available grating elements.

The next section considers the optical properties required of these gratings, including groove density, zero-order transmission, and separation of the higher diffraction orders.

6. Grating Selection and Diffraction Geometry

The diffraction grating has two roles in the proposed experiment. Within the reconstruction model, it produces the local zero-order reference component. At the same time, as a conventional optical element, it redistributes part of the incident light into angularly separated diffraction orders.

For the reference instrument, a practical starting point is a commercially available visible transmission grating with dimensions of approximately

$$50 \times 50 \text{ mm}$$

and a groove density near

$$N_g \approx 300 \text{ grooves mm}^{-1}$$

Such elements are available from standard optical suppliers, for example Edmund Optics or equivalent manufacturers.

The corresponding grating period is

$$d = \frac{1}{N_g}$$

and for

$$N_g = 300 \text{ mm}^{-1}$$

this gives

$$d \approx 3.33 \text{ µm}$$

6.1 Zero order

The diffraction condition for normal incidence is

$$d \sin \theta_m = m$$

For the zero diffraction order,

$$m = 0$$

and therefore

$$\theta_0 = 0$$

The zero-order grating component therefore remains on the nominal optical axis and can enter the same Fabry–Pérot interferometer as the direct component.

This common-axis geometry is essential for the proposed differential measurement.

6.2 First diffraction order

For the first diffraction order,

$$\sin \theta_1 = \frac{\lambda}{d}$$

At a representative wavelength of

$$\lambda = 630 \text{ nm}$$

and

$$d = 3.33 \text{ µm}$$

the first-order angle is approximately

$$\theta_1 \approx 10.9^\circ$$

The corresponding negative order appears symmetrically at approximately

$$\theta_{-1} \approx -10.9^\circ$$

Thus the first diffraction orders are already far from the central optical axis.

Across the visible range, the separation remains large. For example, at 400 nm the first order is approximately

$$\theta_1 \approx 6.9^\circ$$

while at 700 nm it is approximately

$$\theta_1 \approx 12.1^\circ$$

For the narrow central field used in the Fabry–Pérot measurement, these angles are sufficiently large that the higher diffraction

orders should not contaminate the primary direct/zero-order signal.

6.3 Higher orders

Higher diffraction orders satisfy

$$\sin\theta_m = \frac{m\lambda}{d}$$

and are displaced even farther from the optical axis.

At 630 nm and 300 grooves mm^{-1} the approximate positive-order angles are

$$\theta_1 \approx 10.9^\circ$$

$$\theta_2 \approx 22.2^\circ$$

$$\theta_3 \approx 34.5^\circ$$

The higher orders therefore do not need to be used in the primary measurement. Their main relevance is simply that the chosen groove density moves them well away from the common-axis direct and zero-order components.

A substantially higher groove density is therefore not required merely to remove higher-order light from the central field.

6.4 Why approximately 300 grooves mm^{-1} is sufficient

Increasing the groove density decreases the grating period and therefore increases the diffraction angle.

For example, at

$$N_g = 600\ \mathrm{grooves\,mm}^{-1}$$

the period becomes

$$d \approx 1.67\ \mu\mathrm{m}$$

and the first-order angle at 630 nm becomes approximately

$$\theta_1 \approx 22.2^\circ$$

This provides even greater angular separation, but the additional separation is not necessary for the present experiment.

A groove density near 300 grooves mm^{-1} already places the first order more than ten degrees from the optical axis near 630 nm.

The choice of grating density should therefore not be driven by maximum dispersion.

6.5 Zero-order transmission

For the present experiment, the more important grating parameter is the fraction of incident light remaining in the zero diffraction order.

Define the zero-order efficiency as

$$\eta_0 = \frac{I_0}{I_{\mathrm{in}}}$$

where I_{in} is the incident intensity and I_0 is the intensity transmitted in the zero order.

The exact value of η_0 depends on the detailed grating structure, wavelength, polarization, substrate, coatings, and groove profile. It should therefore be measured for the selected commercial element rather than inferred from groove density alone.

Since the reference pupil has approximately equal geometrical areas for the direct and grating paths,

$$A_{\mathrm{gr}} \approx A_{\mathrm{dir}}$$

the expected intensity ratio is approximately

$$\frac{I_{\mathrm{gr}}}{I_{\mathrm{dir}}} \approx \eta_0$$

if the direct transmission is close to unity.

The exact equality of the two signal amplitudes is not required. The zero-order component only needs to provide sufficient signal-to-noise for reliable determination of its spectral position.

6.6 Optical quality

The grating is positioned at the telescope entrance pupil and therefore becomes part of the incoming wavefront.

For this reason, optical flatness and transmitted wavefront quality are important selection criteria. A grating with high zero-order transmission but poor wavefront quality could introduce a different angular distribution into the Fabry–Pérot interferometer and produce an unwanted systematic shift.

The practical grating selection criteria are therefore:

- size near 50 × 50 mm,
- visible transmission operation,
- groove density near 300 grooves mm^{-1},
- sufficiently high zero-order transmission,
- good transmitted wavefront quality,
- stable mechanical mounting.

The exact commercial grating model is not fundamental to the proposed measurement and can be selected experimentally according to these criteria.

The important result is that standard commercial transmission gratings are sufficient in size and groove density for the reference 260-mm telescope configuration. No custom full-aperture grating is required.

7. Fabry–Pérot Measurement and Profile Identification

The Fabry–Pérot interferometer receives the direct and zero-order grating components simultaneously.

The measured signal is therefore the superposition of two possible spectral contributions:

$$S_{\mathrm{mix}}(\lambda) = S_{\mathrm{dir}}(\lambda) + S_{\mathrm{gr}}(\lambda)$$

The corresponding central wavelengths are

$$\lambda_{\mathrm{dir}}$$

and

$$\lambda_{\mathrm{gr}}$$

and the principal observable is their separation

$$\Delta\lambda = \lambda_{\mathrm{dir}} - \lambda_{\mathrm{gr}}$$

The Fabry–Pérot interferometer is used here only as a high-resolution wavelength discriminator. The experiment does not require two interferometers or two separately calibrated optical channels. Both components pass through the same downstream optical system and are recorded during the same exposure.

7.1 Expected profile

If

$$\lambda_{\mathrm{dir}} = \lambda_{\mathrm{gr}}$$

the two components coincide spectrally and the measured signal appears as a single combined Fabry–Pérot profile.

This corresponds to

$$\Delta\lambda = 0$$

and, within the present model,

$$u = c$$

If

$$\lambda_{\mathrm{dir}} \neq \lambda_{\mathrm{gr}}$$

the measured profile contains two displaced components.

For sufficiently large separation, the result appears directly as two distinct Fabry–Pérot peaks. If the profiles overlap partially, their central wavelengths can be obtained by fitting the combined profile.

The experiment therefore reduces the physical question to the measurement of

$$\Delta\lambda$$

or equivalently

$$K = \frac{\lambda_{\mathrm{dir}}}{\lambda_{\mathrm{gr}}}$$

from which

$$u = Kc$$

is obtained within the reconstruction model.

7.2 Identification of the two components

The simultaneous profile alone determines the differential separation, but separate reference measurements are useful for identifying which peak corresponds to which optical path.

A direct-only measurement records

$$S_{\mathrm{dir}}(\lambda)$$

while a grating-only measurement records

$$S_{\mathrm{gr}}(\lambda)$$

These reference profiles provide the individual line shapes and identify the centres

$$\lambda_{\mathrm{dir}}$$

and

$$\lambda_{\mathrm{gr}}$$

in the simultaneous measurement.

The reference measurements are not the primary determination of $\Delta\lambda$. Their role is to identify and characterize the two components already present in the simultaneous spectrum.

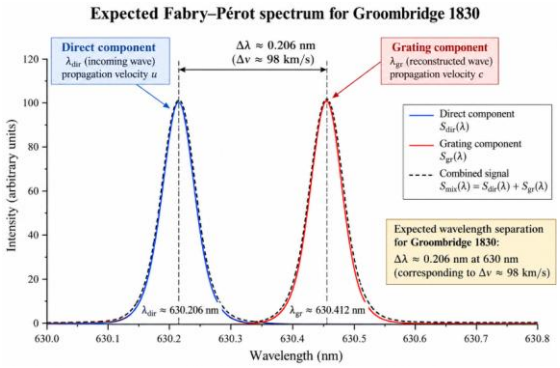

Figure 2. Schematic Fabry–Pérot signal expected for Groombridge 1830. *Within the present model, the direct and zero-order grating components are predicted to appear as two simultaneously recorded spectral peaks separated by approximately 0.206 nm near 630 nm. The absolute wavelength positions shown are illustrative; the experimentally relevant quantities are the peak separation and the ratio $\lambda_{dir}/\lambda_{gr}$.*

7.3 Relative peak amplitudes

The amplitudes of the two components are not expected to be identical.

The direct and grating-covered entrance areas are approximately equal, but only a fraction of the light incident on the grating remains in the zero diffraction order. Therefore, in general,

$$A_{\mathrm{gr}} \neq A_{\mathrm{dir}}$$

for the measured Fabry–Pérot peak amplitudes.

This does not affect the basic measurement. The physical observable is the peak position, not the peak height.

The essential requirement is that both components have sufficient signal-to-noise ratio for reliable determination of their central wavelengths.

7.4 Common optical conditions

A major advantage of the proposed configuration is that both components are measured under nearly identical instrumental conditions.

They use:

- the same astronomical source,
- the same telescope,
- the same Fabry–Pérot interferometer,
- the same detector,
- and the same exposure time.

Slow changes of the instrument therefore act largely in common on the two components.

The most important remaining requirement is that the direct and grating components enter the Fabry–Pérot interferometer with sufficiently similar angular distributions. This is the reason for using the symmetric annular entrance-pupil geometry described in Section 5.

7.5 Measured quantity

Once the two component centres are identified, the experiment determines

$$\Delta\lambda = \lambda_{\mathrm{dir}} - \lambda_{\mathrm{gr}}$$

and

$$K = \frac{\lambda_{\mathrm{dir}}}{\lambda_{\mathrm{gr}}}$$

The incoming propagation velocity then follows from

$$u = c\,\frac{\lambda_{\mathrm{dir}}}{\lambda_{\mathrm{gr}}}$$

The Fabry–Pérot measurement is therefore not intended to establish an absolute stellar wavelength with exceptional accuracy. Its role is to measure a simultaneous differential wavelength between two deliberately generated components of the same incoming astronomical radiation.

8. Astronomical Target: Groombridge 1830

The first experimental target should maximize the expected differential signal while remaining sufficiently bright for high-resolution Fabry–Pérot spectroscopy. A large radial velocity is particularly advantageous because, within the present model, it produces a correspondingly large difference between the direct and locally reconstructed wavelengths.

Groombridge 1830, also known as HD 103095 and HIP 57939, is a suitable primary target. It is a nearby, relatively bright high-velocity star with an approaching radial velocity of approximately

$$v_r \approx -98\ \mathrm{km\,s^{-1}}$$

The negative sign denotes motion toward the observer.

Its visual magnitude is approximately

$$V \approx 6.4$$

so the star is sufficiently bright to make observations with a moderate-aperture telescope realistic, even though the entrance-pupil mask divides the available flux between the direct and grating components.

8.1 Expected velocity scale

The magnitude of the radial velocity relative to the speed of light is approximately

$$\frac{|v_r|}{c} \approx 3.27 \times 10^{-4}$$

Within the propagation model considered here, an approaching source is expected to produce

$$u > c$$

for the incoming direct component.

The wavelength ratio defined in Section 3 is therefore expected to be

$$K = \frac{\lambda_{\mathrm{dir}}}{\lambda_{\mathrm{gr}}} \approx 1.000327$$

and consequently

$$\lambda_{\mathrm{dir}} > \lambda_{\mathrm{gr}}$$

The experiment thus predicts not only a non-zero wavelength difference but also its sign.

8.2 Expected wavelength separation

For small relative differences,

$$\frac{\Delta\lambda}{\lambda} \approx \frac{|v_r|}{c}$$

At a representative wavelength near

$$\lambda \approx 630\ \mathrm{nm}$$

the expected separation is therefore approximately

$$\Delta\lambda \approx 630\ \mathrm{nm} \times 3.27 \times 10^{-4}$$

which gives

$$\Delta\lambda \approx 0.206\ \mathrm{nm}$$

This is the characteristic signal that the proposed experiment is designed to detect.

The exact absolute stellar wavelength is not required. The relevant observable is the simultaneous separation between the direct

and grating components of the same spectral feature.

8.3 Spectral lines

Groombridge 1830 has a rich stellar absorption spectrum, allowing the measurement to be repeated on several suitable isolated lines.

For line i,

$$K_i = \frac{\lambda_{\mathrm{dir},i}}{\lambda_{\mathrm{gr},i}}$$

Within the proposed model, the same incoming propagation velocity should give approximately

$$K_1 \approx K_2 \approx K_3 \approx$$

while the absolute separation increases approximately with wavelength:

$$\Delta\lambda_i \propto \lambda_i$$

This provides a useful internal consistency test without requiring a separate experimental principle.

8.4 Why Groombridge 1830 is a useful first target

Groombridge 1830 combines several properties favourable for the first measurement: a large approaching radial velocity, sufficient optical brightness, a spectrum containing multiple usable absorption lines, and well-characterized stellar motion.

Most importantly, its radial velocity makes the predicted differential wavelength relatively large. The purpose of choosing Groombridge 1830 is therefore not to identify an exceptional astronomical object, but to select a source for which the proposed measurement has a favourable signal scale.

A subsequent experiment using a rapidly receding star would provide a particularly valuable complementary test. Within the present model, the sign of

$$\Delta\lambda = \lambda_{\mathrm{dir}} - \lambda_{\mathrm{gr}}$$

should then reverse.

Groombridge 1830 therefore provides a practical first target for determining whether the propagation velocity of incoming astronomical light can be obtained experimentally from the measured ratio

$$\frac{u}{c} = \frac{\lambda_{\mathrm{dir}}}{\lambda_{\mathrm{gr}}}$$

rather than assigned in advance.

9. Expected Signal

The proposed experiment has a simple observational signature: the Fabry–Pérot interferometer should record either a single coincident profile or two displaced spectral components.

The direct and reconstructed wavelengths are

$$\lambda_{\mathrm{dir}}$$

and

$$\lambda_{\mathrm{gr}}$$

and the measured separation is

$$\Delta\lambda = \lambda_{\mathrm{dir}} - \lambda_{\mathrm{gr}}$$

9.1 Predicted non-zero result

For Groombridge 1830, the present model predicts approximately

$$\frac{u}{c} = \frac{\lambda_{\mathrm{dir}}}{\lambda_{\mathrm{gr}}} \approx 1.000327$$

Near 630 nm this corresponds to

$$\Delta\lambda \approx 0.206\ \mathrm{nm}$$

or

$$\Delta\lambda \approx 2.06\ \backslash\mathrm{AA}$$

The simultaneous Fabry–Pérot signal should therefore contain two components separated by approximately this amount.

For an approaching source such as Groombridge 1830, the predicted ordering is

$$\lambda_{\mathrm{dir}} > \lambda_{\mathrm{gr}}$$

Thus the direct component should appear at the longer wavelength and the reconstructed grating component at the shorter wavelength.

The expected signal can be represented schematically as

$$S_{\mathrm{mix}}(\lambda) = A_{\mathrm{dir}} P(\lambda - \lambda_{\mathrm{dir}}) + A_{\mathrm{gr}} P\left(\lambda - \lambda_{\mathrm{gr}}\right)$$

where the amplitudes A_{dir} and A_{gr} need not be equal.

The important quantity is the peak separation, not the relative peak height.

9.2 Null result

If the incoming astronomical radiation propagates locally with velocity \(c\), then

$$\lambda_{\mathrm{dir}} = \lambda_{\mathrm{gr}}$$

and therefore

$$\Delta\lambda = 0$$

and

$$K = 1$$

The two contributions then coincide spectrally and the Fabry–Pérot interferometer records a single combined profile.

This is a genuine experimental outcome, not a failure of the measurement. It would show that the direct astronomical wave and the locally reconstructed reference component have the same wavelength within the experimental uncertainty.

9.3 Scaling with wavelength

If a non-zero propagation effect is present, the relative wavelength ratio should remain approximately constant for different stellar lines:

$$K_i = \frac{\lambda_{\mathrm{dir},i}}{\lambda_{\mathrm{gr},i}}$$

with

$$K_1 \approx K_2 \approx K_3$$

while the absolute separation should scale approximately with wavelength:

$$\Delta\lambda_i \approx (K - 1)\lambda_i$$

Thus a line at longer wavelength should exhibit a proportionally larger absolute separation, while yielding the same inferred value of u/c.

9.4 Experimental signature

The expected result is therefore highly constrained.

For Groombridge 1830, a signal consistent with the present model would have three principal characteristics:

- two simultaneously recorded Fabry–Pérot components,
- the direct component displaced toward longer wavelength relative to the reconstructed component,
- a relative separation corresponding approximately to $K \approx 1.000327$.

A single coincident profile would instead give

$$u = c$$

within uncertainty.

The measurement therefore does not depend on detecting a subtle change in absolute stellar wavelength. It asks whether two components derived simultaneously from the same incoming radiation occupy the same spectral position or not.

10. Experimental Precedent: Two-Component Fabry–Pérot Profiles

A useful observational precedent for the proposed experiment is provided by astronomical Fabry–Pérot measurements in

which two spectral components were recorded simultaneously within the same narrow wavelength region.

One such example is the [O I] 6300 Å observation of comet C/1995 O1 (Hale–Bopp). The published Fabry–Pérot profile contains two distinct components: one close to zero geocentric velocity and a second displaced by approximately

$$\Delta v_{\mathrm{HB}} \approx 25\ \mathrm{km\,s^{-1}}$$

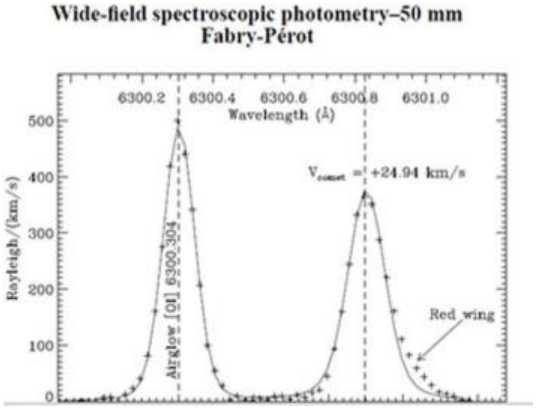

Figure 3. Example of a resolved two-component astronomical Fabry–Pérot profile. *The [O I] 6300 Å observation of comet C/1995 O1 (Hale–Bopp) shows two simultaneously resolved components separated by approximately 25 kms^{-1}. In the conventional interpretation, the near-zero component is terrestrial airglow and the displaced component is associated with the comet. The figure is included as an instrumental precedent for resolving two simultaneous Fabry–Pérot components, not as evidence for the reconstruction model.The conventional interpretation attributes the near-zero component mainly to terrestrial [O I] airglow and the displaced component to cometary emission.*

For the present work, the importance of this observation is instrumental rather than interpretative. It demonstrates that a Fabry–Pérot system can resolve two simultaneously recorded spectral components separated by only several tens of kilometres per second.

Near

$$\lambda \approx 630\ \mathrm{nm}$$

a velocity-equivalent separation of approximately $25 kms^{-1}$ corresponds to

$$\Delta\lambda_{\mathrm{HB}} \approx \lambda \frac{\Delta v_{\mathrm{HB}}}{c}$$

or approximately

$$\Delta\lambda_{\mathrm{HB}} \approx 0.053\ \mathrm{nm}$$

The expected signal for Groombridge 1830 in the present experiment is substantially larger:

$$\Delta\lambda_{\mathrm{G1830}} \approx 0.206\ \mathrm{nm}$$

near the same wavelength region.

The ratio of the two separations is therefore approximately

$$\frac{\Delta\lambda_{\mathrm{G1830}}}{\Delta\lambda_{\mathrm{HB}}} \approx 3.9$$

Thus the predicted direct–grating separation for Groombridge 1830 is nearly four times larger than the separation already distinguishable in the Hale–Bopp two-component profile.

The physical origins of the two cases are different. In the Hale–Bopp observation, the two components are conventionally attributed to different emitting regions. In the proposed experiment, both components originate from the same incoming stellar radiation and are deliberately generated by the entrance-pupil geometry:

$$\text{direct component} + \text{zero-order grating component}$$

The Hale–Bopp measurement therefore does not provide evidence for the reconstruction hypothesis. It provides a practical precedent for the detectability of a simultaneous two-component Fabry–Pérot signal with a separation smaller than that expected in the proposed Groombridge 1830 experiment.

This comparison supports the feasibility of using

$$\Delta\lambda = \lambda_{\mathrm{dir}} - \lambda_{\mathrm{gr}}$$

as the primary observable of the experiment.

11. Calibration and Critical Controls

Because the primary measurement is simultaneous and differential, the calibration strategy can remain relatively compact. Standard wavelength calibration, detector characterization, exposure control, and uncertainty estimation follow established high-resolution Fabry–Pérot practice.

The experiment requires special attention only to effects that could create a false difference between

$$\lambda_{\mathrm{dir}}$$

and

$$\lambda_{\mathrm{gr}}$$

The critical controls are therefore those that test the direct and grating paths against each other.

11.1 Laboratory zero test

The complete optical system should first be tested with a stationary laboratory source.

For such a source, the expected result is

$$\lambda_{\mathrm{dir}} \approx \lambda_{\mathrm{gr}}$$

and therefore

$$\Delta\lambda_{\mathrm{lab}} \approx 0$$

within the instrumental uncertainty.

This test is especially important because it includes the entrance-pupil assembly, the grating elements, the telescope optics, the Fabry–Pérot interferometer, and the detector in one complete measurement.

Any reproducible laboratory offset must be characterized before the astronomical result is interpreted.

11.2 Direct-only and grating-only reference profiles

The simultaneous mixed profile provides the primary differential measurement. Separate direct-only and grating-only observations are used only to identify the two components and establish their individual profile shapes.

The direct-only state gives

$$S_{\mathrm{dir}}(\lambda)$$

while the grating-only state gives

$$S_{\mathrm{gr}}(\lambda)$$

These reference profiles identify the corresponding peaks in

$$S_{\mathrm{mix}}(\lambda)$$

and help determine their central wavelengths reliably.

The principal value of $\Delta\lambda$, however, is obtained from the simultaneous profile.

11.3 Direct–grating optical equivalence

The most important experiment-specific systematic is a possible difference in the optical conditions under which the direct and grating components reach the Fabry–Pérot interferometer.

The grating sectors can modify not only intensity but also wavefront quality, angular distribution, polarization, or transmitted phase.

The fixed annular pupil geometry is designed to minimize geometrical differences between the two components, but the residual effect must be experimentally verified.

The critical requirement is that a stationary source does not produce a false wavelength

separation merely because one component has passed through the grating.

This is the principal reason why the laboratory zero test is more informative than an extensive list of ordinary calibration procedures.

11.4 Zero-order transmission

The zero-order grating signal is expected to be weaker than the direct signal because only a fraction

$$\eta_0$$

of the incident light remains in the zero order.

The selected grating should therefore be characterized experimentally for its zero-order transmission near the wavelength range used for the stellar observation.

The relative amplitudes of the two Fabry–Pérot peaks may differ substantially without affecting the measurement principle. The important condition is that both peaks remain measurable with sufficient precision.

11.5 Reproducibility

The astronomical measurement should be repeated in independent observing sequences.

A physical result should reproduce the same wavelength ratio

$$K = \frac{\lambda_{\mathrm{dir}}}{\lambda_{\mathrm{gr}}}$$

within the experimental uncertainty.

Likewise, several suitable stellar lines should give approximately the same value of K.

These repetitions provide a compact but strong control against an accidental instrumental or line-specific displacement.

11.6 Calibration criterion

The decisive experimental requirement can be summarized simply:

$$\Delta\lambda_{\mathrm{lab}} \approx 0$$

while the astronomical measurement should give a reproducible

$$\Delta\lambda_{\mathrm{star}}$$

that is stable across repeated observations and several spectral lines.

Only a wavelength difference that survives these controls should be interpreted through

$$\frac{u}{c} = \frac{\lambda_{\mathrm{dir}}}{\lambda_{\mathrm{gr}}}$$

within the present model.

This keeps the calibration programme focused on the one question that is specific to the proposed experiment: whether the grating itself can generate an instrumental wavelength offset that could imitate the sought propagation signal.

12. Internal Consistency Checks

The proposed measurement should not depend on a single spectral line or a single observing sequence. A genuine propagation-related effect should reproduce the same dimensionless wavelength ratio under independent measurements.

For each suitable stellar line i,

$$K_i = \frac{\lambda_{\mathrm{dir},i}}{\lambda_{\mathrm{gr},i}}$$

The expected consistency condition is

$$K_1 \approx K_2 \approx K_3 \approx$$

within the experimental uncertainty.

At the same time, the absolute wavelength separation should scale approximately with wavelength:

$$\Delta\lambda_i \approx (K-1)\lambda_i$$

Thus different spectral lines should not exhibit an arbitrary fixed displacement. Longer-wavelength lines should show a proportionally

larger absolute separation while giving the same value of K.

Repeated observing sequences provide a second consistency test. If the measured ratio is a property of the incoming astronomical radiation, then

$$K^{(1)} \approx K^{(2)} \approx K^{(3)}$$

should hold for independent observations of the same target.

A third test follows from observations of stars with different radial velocities. Within the present model, the magnitude and sign of the differential wavelength should follow the corresponding source motion. In particular, an approaching and a receding high-velocity star should produce opposite signs of

$$\Delta\lambda = \lambda_{\mathrm{dir}} - \lambda_{\mathrm{gr}}$$

These checks do not replace instrumental calibration, but they provide independent tests of whether an observed wavelength separation behaves as a propagation-related quantity rather than as a line-specific or instrumental offset.

The strongest result would therefore combine three properties: reproducibility between observing runs, a nearly constant K across several spectral lines, and the expected change in sign and magnitude for targets with different radial velocities.

13. Criteria for Interpretation

The proposed experiment is intended to produce a result that can be interpreted with minimal ambiguity. The central measured quantities are

$$\Delta\lambda = \lambda_{\mathrm{dir}} - \lambda_{\mathrm{gr}}$$

and

$$K = \frac{\lambda_{\mathrm{dir}}}{\lambda_{\mathrm{gr}}}$$

with

$$u = Kc$$

within the reconstruction model.

13.1 Null result

If

$$\lambda_{\mathrm{dir}} = \lambda_{\mathrm{gr}}$$

within the experimental uncertainty, then

$$K = 1$$

and therefore

$$u = c$$

within the sensitivity of the experiment.

This would show that the directly arriving astronomical wave and the locally reconstructed component have the same wavelength.

13.2 Non-zero result with the predicted sign and magnitude

For Groombridge 1830, the present model predicts

$$K \approx 1.000327$$

and near 630 nm

$$\Delta\lambda \approx 0.206\ \mathrm{nm}$$

with

$$\lambda_{\mathrm{dir}} > \lambda_{\mathrm{gr}}$$

A reproducible result of this form, surviving the laboratory zero test and the internal consistency checks, would give

$$u > c$$

for the incoming astronomical radiation within the present model.

Such a result would not merely represent an additional stellar spectral shift, because both components originate from the same incoming radiation and are measured simultaneously.

13.3 Non-zero result with an unexpected magnitude

A reproducible non-zero separation that does not agree quantitatively with the predicted value would still be physically significant.

It would imply

$$K \neq 1$$

but would indicate that the simple relation between source radial motion and the predicted propagation velocity is incomplete.

The measurement and its theoretical interpretation should therefore be kept distinct. The experiment determines K; the model determines how K is related to the motion and history of the source.

13.4 Opposite sign

For an approaching source, the present model predicts

$$\Delta\lambda > 0$$

If a robust experiment instead gives

$$\Delta\lambda < 0$$

the result would contradict the specific propagation prediction used in this work.

A statistically significant wrong-sign result should therefore not be reinterpreted as confirmation of the model.

13.5 Wavelength-dependent ratio

For a genuine propagation effect, several stellar lines should yield approximately the same wavelength ratio:

$$K_1 \approx K_2 \approx K_3$$

If instead K varies systematically with wavelength, the effect would require another explanation, such as wavelength-dependent instrumental behaviour or a propagation mechanism different from that proposed here.

13.6 Instrument-dependent result

A non-zero astronomical separation is not sufficient by itself.

If a similar displacement appears in the laboratory zero test, depends strongly on the selected grating, changes with instrumental alignment, or is not reproducible between observing runs, it should be treated as an instrumental effect rather than as a measurement of u.

The strongest interpretation therefore requires the combination

$$\Delta\lambda_{\mathrm{lab}} \approx 0$$

together with a stable non-zero stellar result.

13.7 Experimental priority

The experiment should therefore be interpreted in the following order:

1. establish whether $\Delta\lambda$ is reproducibly zero or non-zero;
2. determine the sign of the difference;
3. determine the wavelength ratio K;
4. test whether K is consistent across several spectral lines and observing sequences;
5. only then compare the measured result with the theoretical prediction for the source motion.

This separation between measurement and interpretation is essential. The primary result of the experiment is the measured wavelength ratio

$$K = \frac{\lambda_{\mathrm{dir}}}{\lambda_{\mathrm{gr}}}$$

The inferred propagation velocity

$$u = Kc$$

and its broader physical meaning follow only after the experimental controls have been satisfied.

14. Implications for Physics

The significance of the proposed experiment lies in the fact that it treats the propagation velocity of incoming astronomical light as an

experimental result rather than as a quantity fixed before the measurement.

The measured quantity is

$$K = \frac{\lambda_{\mathrm{dir}}}{\lambda_{\mathrm{gr}}}$$

from which, within the reconstruction model,

$$u = Kc$$

The physical implications therefore depend primarily on whether

$$K = 1$$

or

$$K \neq 1$$

14.1 If the experiment gives a null result

If

$$\lambda_{\mathrm{dir}} = \lambda_{\mathrm{gr}}$$

within experimental uncertainty, then

$$u = c$$

for the incoming astronomical radiation within the sensitivity of the experiment.

This would provide a direct local confirmation that astronomical light arriving from a rapidly moving stellar source has the same propagation velocity as the locally reconstructed reference wave.

Such a result would be fully consistent with standard electrodynamics and special relativity.

Its significance would nevertheless be experimental rather than merely theoretical: the value u=c would have been obtained from a differential measurement specifically designed to leave u open as an observable.

The experiment would therefore close, at least within its sensitivity, the distinction between assuming u=c for arriving astronomical light and determining it experimentally.

14.2 If a reproducible non-zero result is obtained

A substantially different situation arises if

$$\lambda_{\mathrm{dir}} \neq \lambda_{\mathrm{gr}}$$

and the difference survives the laboratory zero test, repeated observations, and measurements of several stellar spectral lines.

Then

$$K \neq 1$$

and consequently

$$u \neq c$$

within the reconstruction model.

Such a result would not be a small correction to an astronomical radial-velocity measurement. It would indicate that the spatial wavelength of the arriving astronomical wave and the wavelength associated with its locally reconstructed frequency reference are not related through the standard local relation

$$c = f\lambda_{\mathrm{dir}}$$

Instead, the experiment would give

$$u = f\lambda_{\mathrm{dir}}$$

with

$$u \neq c$$

This would require a reassessment of the physical interpretation of astronomical spectral shifts.

14.3 Frequency, wavelength, and propagation velocity

In conventional vacuum propagation,

$$c = f\lambda$$

links frequency and wavelength through a fixed propagation velocity.

The proposed measurement separates these quantities experimentally.

The reconstructed component determines the temporal frequency through

$$f = \frac{c}{\lambda_{gr}}$$

while the direct component supplies the incoming spatial wavelength

$$\lambda_{dir}$$

A non-zero difference between the two wavelengths would therefore imply that frequency and spatial wavelength cannot always be converted into one another by inserting c for the incoming astronomical wave.

This would make the distinction between frequency shift and wavelength shift physically important rather than merely representational.

14.4 Consequences for the interpretation of Doppler shifts

Astronomical radial velocities are commonly derived from spectral shifts within a framework in which the received radiation propagates locally with velocity c.

If the proposed experiment finds

$$u = c$$

that framework receives direct support from the measurement.

If instead

$$u \neq c$$

then an observed spectral displacement could no longer be interpreted solely as a change in frequency or wavelength under the prior condition u=c.

The three quantities

$$f, \lambda,$$

would have to be considered separately.

This would require reconsideration of how source motion is mapped into the observed spectral state of the received radiation.

14.5 Dependence on source motion

The present model predicts that the sign and magnitude of the effect are related to the radial motion of the source.

For Groombridge 1830, the predicted result is

$$u > c$$

and therefore

$$\lambda_{dir} > \lambda_{gr}$$

A rapidly receding source should provide the complementary case.

If subsequent observations show that the measured ratio K varies systematically with source radial velocity, this would suggest that the propagation state of the arriving wave retains information related to the motion of the source.

Such a result would represent a major departure from the standard local description of vacuum light propagation.

14.6 Broader significance of a non-zero result

A confirmed result with

$$u \neq c$$

would not by itself establish a complete alternative theory of electrodynamics.

It would, however, establish a new experimental fact that any viable theory would have to explain.

The immediate questions would include:

- how the propagation velocity depends on source motion,
- whether the effect persists over astronomical distances,
- whether reflection preserves the incoming propagation state,
- under what interactions the wave is locally reconstructed,
- and whether the same behaviour occurs for approaching and receding sources.

These questions would then become experimental rather than purely theoretical.

14.7 Significance of the measurement itself

The most important contribution of the proposed experiment may therefore precede its result.

The experiment introduces a procedure in which the propagation velocity of astronomical light is deliberately left unknown until after the measurement.

The key relation

$$\frac{u}{c} = \frac{\lambda_{\mathrm{dir}}}{\lambda_{\mathrm{gr}}}$$

turns the question of light propagation into a measurable wavelength ratio.

If the ratio is unity, the standard expectation is confirmed directly for the arriving astronomical wave.

If it is not unity, the result would require a substantial revision of the relation between source motion, frequency, wavelength, and propagation velocity.

In either case, the measurement addresses a quantity that is normally supplied by the theoretical framework and makes it experimentally testable.

15. Discussion

The proposed experiment is conceptually unusual because it does not begin by assigning the propagation velocity of the incoming astronomical radiation. Instead, it attempts to determine that velocity from two locally measured wavelength states of the same incoming light.

The central relation is

$$\frac{u}{c} = \frac{\lambda_{\mathrm{dir}}}{\lambda_{\mathrm{gr}}}$$

The experimental challenge is therefore reduced to determining whether the direct and reconstructed wavelengths are identical or measurably different.

15.1 Why the experiment is feasible

The proposed measurement does not require an extremely small signal.

For Groombridge 1830, the present model predicts near 630 nm

$$\Delta\lambda \approx 0.206\ \mathrm{nm}$$

This is substantially larger than the separation already resolved in published two-component Fabry–Pérot measurements such as the Hale–Bopp example discussed in Section 10.

The experiment also does not require a large astronomical telescope. The reference design shows that a telescope aperture of approximately 260 mm can be matched to eight commercially available 50 × 50 mm transmission gratings, while preserving nearly equal direct and grating-covered areas of the usable pupil.

The principal instrumental components are therefore conventional:

- a moderate-aperture telescope,
- commercial transmission gratings,
- a fixed entrance-pupil mask,
- a high-resolution Fabry–Pérot interferometer,
- and a suitable detector.

The novelty lies primarily in how these components are combined and in the physical quantity extracted from the measurement.

15.2 The decisive role of the grating

The physical interpretation depends critically on the reconstruction hypothesis introduced in Part C1.

Conventionally, the zero diffraction order is simply one output of the grating. In the present model, the grating interaction is additionally assumed to reconstruct the spatial electromagnetic structure while preserving the temporal interaction frequency.

This assumption is what permits the reconstructed component to serve as a local frequency reference:

$$f = \frac{c}{\lambda_{gr}}$$

The experiment therefore tests more than the propagation velocity of astronomical light. It simultaneously tests whether the grating behaves in the way required by the reconstruction model.

For this reason, a null result can have more than one possible interpretation. It may indicate that

$$u = c$$

for the incoming astronomical radiation, but it could also mean that the assumed reconstruction mechanism does not produce the required independent reference state.

This distinction should be kept explicit.

15.3 What a non-zero result would establish

A reproducible

$$\Delta\lambda \neq 0$$

that is absent in the laboratory zero test and consistent across several stellar lines would be a much stronger result.

It would demonstrate that the direct and grating-generated components derived from the same incoming astronomical radiation do not occupy the same spectral position.

Within the reconstruction model, this would imply

$$u \neq c$$

for the incoming direct component.

Such a result would be difficult to interpret as an ordinary Doppler shift because both components originate from the same already-arrived stellar radiation. Their difference would be generated locally by whether or not the radiation passes through the grating.

The measured quantity would therefore be a property of the relation between the incoming wave and the locally reconstructed reference component.

15.4 What a null result would establish

A null result is also physically important.

If

$$\Delta\lambda = 0$$

within sufficiently small experimental uncertainty, then the experiment would provide direct local evidence that the arriving astronomical wave and the reconstructed reference component share the same wavelength.

Within the present model this gives

$$u = c$$

for the incoming radiation.

The value of such a result lies in the fact that u has been left open during the measurement procedure rather than inserted at the beginning.

15.5 Separation between measurement and theory

The experiment should be evaluated in two stages.

The first stage is purely observational:

$$\lambda_{dir} \; ? \; \lambda_{gr}$$

The second stage is theoretical interpretation.

The measured ratio

$$K = \frac{\lambda_{dir}}{\lambda_{gr}}$$

is the experimental result.

The inference

$$u = Kc$$

depends on the reconstruction model.

This separation is important because it allows the experiment to remain meaningful even if the theoretical interpretation later changes.

15.6 Remaining experimental questions

The reference design is intended to establish feasibility rather than provide a final engineering specification.

Several quantities should be characterized before observation:

- the actual zero-order efficiency of the selected grating,
- transmitted wavefront quality,
- the angular distribution of the direct and grating components at the Fabry–Pérot interferometer,
- the achievable signal-to-noise ratio for Groombridge 1830,
- and the practical profile width of the selected Fabry–Pérot system.

These are technical design questions rather than conceptual obstacles.

The laboratory zero test is particularly important because it tests many of these effects simultaneously.

15.7 Extension to additional targets

Groombridge 1830 is selected because it provides a large expected signal for a first experiment.

The method should later be extended to stars with different radial velocities.

A particularly informative sequence would include:

$$v_r < 0$$

$$v_r \approx 0$$

and

$$v_r > 0$$

Within the present model, the corresponding differential wavelength should change systematically in both magnitude and sign.

Such a programme would provide a substantially stronger test than a single-star observation.

15.8 Experimental rather than interpretative priority

The main purpose of the present work is therefore not to establish in advance which theoretical description of light propagation is correct.

Its purpose is to identify a measurement that appears to be physically accessible but is normally not made directly:

$$u_{\text{incoming}}$$

for astronomical light already entering the telescope.

The proposed method suggests that this quantity can be transformed into a differential wavelength measurement using existing optical technology.

Whether the result is

$$u = c$$

or

$$u \neq c$$

the experiment would replace an assumed quantity with an experimentally tested one.

That is the principal motivation for performing the measurement.

16. Conclusions

The purpose of this work has been to propose a practical experiment in which the propagation velocity of incoming astronomical light is treated as an independent experimental quantity.

The basic relation

$$u = f\lambda$$

contains three physical quantities. In ordinary astronomical spectroscopy, the local propagation velocity is normally taken to be

$$u = c$$

and frequency and wavelength are interpreted within that framework.

The present experiment changes this logical order. It first measures two wavelength states of the same incoming astronomical radiation and only then infers the propagation velocity.

The direct component provides the incoming spatial wavelength

$$\lambda_{\mathrm{dir}}$$

while the zero-order grating component provides, within the reconstruction model developed in Part C1, the locally reconstructed wavelength

$$\lambda_{\mathrm{gr}}$$

associated with the same temporal frequency.

The propagation velocity then follows from

$$\frac{u}{c} = \frac{\lambda_{\mathrm{dir}}}{\lambda_{\mathrm{gr}}}$$

or

$$u = c\,\frac{\lambda_{\mathrm{dir}}}{\lambda_{\mathrm{gr}}}$$

The proposed implementation is intentionally simple. A telescope aperture of approximately 260 mm is combined with eight fixed 50 × 50 mm transmission gratings arranged symmetrically around a central obscuration. The usable annular pupil is divided almost equally between direct and grating-covered regions, allowing both components to be generated simultaneously and measured by the same Fabry–Pérot interferometer.

A groove density near

$$300\ \mathrm{grooves\,mm^{-1}}$$

is sufficient to move the first diffraction order well away from the central measurement field while preserving the zero order on the nominal optical axis. The more important practical grating parameters are the zero-order transmission and transmitted wavefront quality.

Groombridge 1830 provides a favourable first target. Within the present model, its approaching radial velocity of approximately

$$v_r \approx -98\ \mathrm{km\,s^{-1}}$$

corresponds near 630 nm to an expected direct–grating separation of approximately

$$\Delta\lambda \approx 0.206\ \mathrm{nm}$$

This predicted separation is substantially larger than the two-component separations already resolved in astronomical Fabry–Pérot observations such as the Hale–Bopp example discussed in this work.

The experiment therefore has a clear outcome.

If

$$\lambda_{\mathrm{dir}} = \lambda_{\mathrm{gr}}$$

within experimental uncertainty, then

$$u = c$$

within the reconstruction model.

If instead a reproducible result gives

$$\lambda_{\mathrm{dir}} \neq \lambda_{\mathrm{gr}}$$

then the measured wavelength ratio determines

$$u \neq c$$

within the same model.

The strongest result would be one that is absent in the laboratory zero test, reproducible between observing sequences, and consistent across several stellar spectral lines.

A null result would provide a direct local confirmation of the standard expectation for astronomical light arriving at the telescope. A robust non-zero result would require a reconsideration of the relation between

frequency, wavelength, propagation velocity, and the interpretation of astronomical Doppler shifts.

The significance of the proposed experiment therefore lies not only in the particular optical arrangement, but in the experimental question itself.

The propagation velocity of incoming astronomical light need not remain a quantity supplied entirely by the theoretical framework. It can, in principle, be converted into a measurable wavelength ratio and subjected to direct experimental test.

References

[1] L. Lindegren and D. Dravins, "Astrometric radial velocities for nearby stars," *Astronomy & Astrophysics*, vol. 652, A45, 2021. doi: 10.1051/0004-6361/202141344. A&A

[2] D. Dravins, L. Lindegren, and S. Madsen, "Astrometric radial velocities. I. Non-spectroscopic methods for measuring stellar radial velocity," *Astronomy & Astrophysics*, vol. 348, pp. 1040–1051, 1999.

[3] C. Allende Prieto, R. J. García López, D. L. Lambert, and B. Ruiz Cobo, "Model Photospheres for Late-Type Stars from the Inversion of High-Resolution Spectroscopic Observations. Groombridge 1830 and Epsilon Eridani," 1999. arXiv

[4] J. P. Morgenthaler, W. M. Harris, F. Scherb, C. M. Anderson, R. J. Oliversen, N. E. Doane, M. R. Combi, M. L. Marconi, and W. H. Smyth, "Large-Aperture [O I] 6300 Å Photometry of Comet Hale-Bopp: Implications for the Photochemistry of OH," *The Astrophysical Journal*, vol. 563, pp. 451–461, 2001. NASA Technical Reports Server

[5] F. J. Bailén, D. Orozco Suárez, and J. C. del Toro Iniesta, "Fabry–Pérot etalons in solar astronomy. A review," *Astrophysics and Space Science*, vol. 368, article 55, 2023. doi: 10.1007/s10509-023-04212-3. Springer

[6] Edmund Optics, "300 Grooves, 50 mm Sq, 17.5° Groove Angle Transmission Grating," Stock No. 49-583, transmission diffraction grating, 50 × 50 mm, 300 grooves mm\(^{-1}\), wavelength range 400–700 nm