Part C1 - **Preservation and Reconstruction of Wave Structure**

Franc Rozman

Abstract

This work examines whether different optical elements necessarily preserve the same physical information carried by an electromagnetic wave. The analysis distinguishes between the organized spatial structure of the wave and the temporal rate at which that structure is encountered by a moving observer or optical element.

A central prediction of the present model is that purely longitudinal, or radial, relative motion does not by itself change the physical wavelength of an already formed electromagnetic wave. The spatial separation between successive equivalent phases remains

$$\lambda_{\mathrm{dir}} = \lambda_0$$

while the temporal interaction rate changes according to

$$f_{\mathrm{int}} = \frac{c \pm v_r}{\lambda_0}$$

Thus, within the proposed kinematic description,

$$\Delta\lambda_{\parallel} = 0$$

can coexist with

$$\Delta f_{\mathrm{int}} \neq 0$$

Relative motion therefore changes the rate at which the existing wave structure is encountered without necessarily changing the spatial structure itself.

The paper compares four optical systems: a prism, an ideal mirror, a Fabry–Pérot interferometer, and a diffraction grating. A prism continuously modifies the propagation conditions while preserving field continuity; a mirror redirects the organized electromagnetic structure; and a Fabry–Pérot interferometer repeatedly reflects and compares the existing spatial periodicity with a geometrical cavity length. These interactions are treated as structure-preserving.

A diffraction grating is proposed to behave differently. Its spatial transmission function interrupts the incident electromagnetic field and produces a strongly nonuniform field immediately behind the grating. The central additional hypothesis is that the original ordered spatial structure is sufficiently disrupted that a new propagating wave must be reconstructed.

The temporal periodicity of the interaction survives this process and determines the frequency of the reconstructed wave, while its wavelength is established anew relative to the grating.

For a moving grating, the interaction frequency is therefore

$$f_{\mathrm{int}} = \frac{c \pm v}{\lambda_0}$$

and the reconstructed wave satisfies

$$\lambda_{\mathrm{gr}} = \frac{c}{f_{\mathrm{int}}}$$

relative to the grating.

The resulting distinction is experimentally important. Structure-preserving optical systems are predicted to continue responding to the existing wavelength, whereas a structure-reconstructing diffraction grating may establish a different wavelength when relative motion is present.

The model does not replace Maxwell's equations or relativistic coordinate transformations. Maxwell's equations remain the local description of the electromagnetic field, while the additional hypothesis concerns the physical reconstruction of an ordered propagating wave after spatial disruption at the grating.

The principal prediction is therefore that radial relative motion can change temporal interaction frequency without changing the wavelength of the existing incident wave, while a diffraction grating may convert that changed temporal rate into a newly reconstructed wavelength. This distinction provides the theoretical basis for the direct differential measurement of astronomical light developed in Part C2.

1. Introduction

Electromagnetic radiation is commonly characterized by its frequency f, wavelength λ, and propagation velocity c, related in free space by

$$c = f\lambda.$$

In most optical measurements, frequency and wavelength are treated as mutually equivalent descriptions of the same electromagnetic wave. A measured change in one is therefore normally interpreted as a corresponding change in the other. This interpretation is appropriate when the wave is described in the reference system in which its propagation velocity is c. It does not, however, by itself distinguish between the internal structure of the electromagnetic wave and the rate at which that structure passes a moving observer or interacts with a moving optical element.

This distinction becomes important when an observer moves relative to an electromagnetic wave. Consider two identical waves propagating in opposite directions. A stationary observer measures the same frequency f and the same wavelength λ for both waves. A second observer moving with velocity v toward one wave and away from the other encounters their spatial structures at different rates. The respective crossing velocities are

c+v

and

c-v.

If the wavelength represents the spatial structure of the wave, the corresponding rates at which successive periods pass the moving observer are

$$f_+ = \frac{c+v}{\lambda}$$

and

$$f_- = \frac{c-v}{\lambda}.$$

The two different measured temporal rates therefore do not require the two electromagnetic waves themselves to possess different spatial structures. They can arise from different rates at which the same type of structure crosses the observer.

This observation motivates an important distinction used throughout this work. The frequency f characterizing an electromagnetic wave in its original propagation system is distinguished from the **interaction frequency** f_{int}, which describes the rate at which successive periods of the wave encounter a moving optical element. For longitudinal relative motion,

$$f_{\mathrm{int}} = \frac{c \pm v}{\lambda},$$

where the sign depends on whether the optical element approaches or recedes from the incoming wave.

The central question of this paper is what happens to the electromagnetic wave when such an interaction occurs. Different optical elements do not interact with the spatial structure of the wave in the same way.

A prism provides a continuous electromagnetic medium. The propagation velocity inside the material changes according to its permittivity and permeability,

$$u = \frac{1}{\sqrt{\varepsilon\mu}},$$

and the wavelength changes correspondingly while the wave propagates through the material. The electromagnetic field, however, remains spatially continuous. When the wave leaves the prism and returns to free space, its original propagation conditions are restored.

An ideal mirror represents another continuous interaction. The incoming Maxwellian field is redirected without being spatially fragmented into independent transmitted portions. The reflected wave therefore preserves the organized spatial structure of the incident wave, although its direction and its interaction with a moving mirror may modify the frequency and propagation velocity measured in another reference system. A Fabry–Pérot interferometer belongs to the same class because its operation is based on repeated reflection of an already organized electromagnetic wave.

A diffraction grating is physically different. Its transparent and opaque regions spatially interrupt the incident electromagnetic field. Immediately behind the grating, the original smooth wave structure is replaced by a strongly non-uniform electromagnetic field containing large spatial gradients and separated transmitted regions. The original wavelength can therefore no longer be assumed to survive as an intact spatial structure.

At the same time, the temporal variation of the electromagnetic field is not necessarily destroyed by this spatial interruption. This leads to the central hypothesis investigated in the present work:

A diffraction grating can destroy the spatial organization of a wave while preserving its temporal periodicity.

The transmitted electromagnetic field may subsequently reorganize into a new propagating wave. In this process, the

preserved temporal periodicity provides the frequency of the newly formed wave, while its wavelength is established anew from that frequency and the propagation velocity relative to the grating.

The distinction can therefore be expressed schematically as

prism or mirror: organized wave
→ continuous transformation
→ organized wave,

whereas for a diffraction grating,

[organized wave → spatial disruption
→ field reconstruction
→ new organized wave.]

This difference has direct experimental consequences. If a prism, mirror, or Fabry–Pérot interferometer preserves the spatial structure of the incident wave while a diffraction grating reconstructs the wavelength from the temporal periodicity present at the grating, the two classes of optical instruments need not respond identically when the source, observer, or optical element is in relative motion.

The purpose of this paper is to derive these consequences explicitly. First, frequency and wavelength are separated from the rate at which a moving observer or optical element crosses the electromagnetic structure. The interactions with a prism, a moving mirror, a Fabry–Pérot interferometer, and a diffraction grating are then examined separately. Particular attention is given to the same physical event described from the laboratory frame and from the frame of the optical element. Finally, the resulting predictions for frequency and wavelength are compared for the different classes of optical interactions. The independent measurement of frequency, wavelength, and propagation velocity is developed separately in Part C2.

The decisive question is therefore not merely whether an optical instrument can determine a spectral shift. It is whether different optical principles preserve the same physical properties of the incident electromagnetic wave.

2. Electromagnetic Wave as a Physical Entity

An electromagnetic wave is a physical field structure characterized by electric and magnetic fields that evolve in space and time according to Maxwell's equations. In free space, these fields satisfy

$$\nabla \cdot E = 0$$

$$\nabla \cdot B = 0$$

$$\nabla \times E = -\frac{\partial B}{\partial t}$$

$$\nabla \times B = \mu_0 \varepsilon_0 \frac{\partial E}{\partial t}$$

These equations describe the local coupling between the electric and magnetic components of the electromagnetic field. The present work uses them without introducing an observer velocity into the field equations themselves. The motion of an observer or an optical element is introduced separately through its motion relative to the propagating electromagnetic structure.

For a periodic electromagnetic wave propagating in free space, its spatial and temporal structure may be represented by a field component of the form

$$E(x,t) = E_0 \cos(kx - \omega t)$$

where

$$k = \frac{2\pi}{\lambda}$$

and

$$\omega = 2\pi f$$

For the wave in the propagation system associated with its formation,

$$c = f\lambda$$

The quantities f and λ characterize two different aspects of the same electromagnetic structure. The wavelength λ describes its spatial periodicity, whereas the frequency f describes its temporal periodicity. Together with the propagation velocity c, they provide a complete description of the periodic propagation of the wave in this system.

A central distinction in the present work is made between the electromagnetic wave itself and the manner in which an observer encounters that wave. Motion of an observer does not by itself require the spatial electromagnetic structure to be physically reconstructed. Instead, the observer may cross the existing structure at a rate different from that associated with its original propagation.

This distinction becomes particularly clear when wavelength is interpreted as the spatial separation of equivalent phases of the electromagnetic field. At a given instant, two consecutive equivalent phases are separated by

$$\lambda$$

That spatial separation belongs to the wave structure. An observer moving through the structure may encounter these phases more rapidly or more slowly, but this alone does not imply that the physical distance between the phases has changed.

Accordingly, the present work distinguishes between two quantities that are often represented by the same symbol in conventional descriptions.

The first is the frequency characterizing the electromagnetic wave itself,

$$f$$

The second is the rate at which the periodic structure passes a particular observer or optical element,

$$f_{\mathrm{cross}}$$

If the structure passes the observer with crossing velocity u_{cross}, then

$$f_{\mathrm{cross}} = \frac{u_{\mathrm{cross}}}{\lambda}$$

Only when the observer is stationary in the propagation system for which the wave velocity is c do the two coincide:

$$u_{\mathrm{cross}} = c$$

and therefore

$$f_{\mathrm{cross}} = f$$

For a moving observer, however,

$$u_{\mathrm{cross}} \neq c$$

may occur within the kinematic description developed in this work. The measured rate at which the wave periods pass that observer can then differ from f, although the underlying spatial structure of the electromagnetic wave has not been physically modified.

This provides the basis for an important interpretation of the familiar relation

$$c = f\lambda$$

In the present model, this relation describes the internal relation between the temporal periodicity, spatial periodicity, and propagation velocity of the electromagnetic wave in the system associated with its propagation. It is not assumed in advance that the product of the frequency measured by every moving observer and the unchanged wavelength must equal c.

Instead, for an observer crossing the same spatial wave structure,

$$f_{\mathrm{cross}}\lambda = u_{\mathrm{cross}}$$

The distinction is fundamental for the optical interactions considered later in this paper. A moving observer can sample an existing electromagnetic structure without changing it. A moving optical element, however, can also interact physically with the field. Whether that interaction merely redirects or continuously deforms the existing wave, or instead destroys its spatial organization and produces a new

electromagnetic structure, depends on the physical nature of the optical element.

The present work therefore treats an electromagnetic wave as a physical entity with an organized spatial and temporal field structure. Continuous propagation, refraction, reflection, and spatial disruption are then analysed as different physical processes acting upon this structure. This approach makes it possible to distinguish between a change in the observation of a wave and a physical change in the wave itself.

To establish this distinction quantitatively, the following section considers two identical electromagnetic waves propagating in opposite directions and compares their observation by a stationary and a moving observer. This symmetric configuration provides the simplest way to separate the intrinsic structure of the wave from the rate at which that structure passes an observer.

3. Wave Structure and the Motion of an Observer

To distinguish the physical structure of an electromagnetic wave from the rate at which this structure is encountered by an observer, consider the symmetric configuration shown in Figure 1. Two identical electromagnetic waves propagate in opposite directions. A stationary observer is positioned between them, while a second observer moves with velocity v.

Both waves are assumed to originate under identical conditions. Their physical structure is therefore characterized by the same frequency and wavelength,

$$f_1 = f_2 = f$$

and

$$\lambda_1 = \lambda_2 = \lambda$$

while their propagation velocities have equal magnitude c and opposite directions.

For the stationary observer, the situation is completely symmetric. The observer remains fixed while the two electromagnetic structures propagate past it with equal speed. The measured frequency and wavelength are therefore identical for both waves,

$$f_{\rightarrow} = f_{\leftarrow} = f$$

and

$$\lambda_{\rightarrow} = \lambda_{\leftarrow} = \lambda$$

with

$$c = f\lambda$$

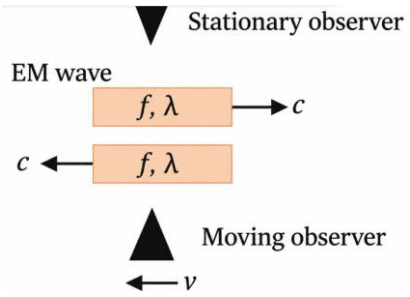

Figure 1. *Two identical electromagnetic waves observed by a stationary and a moving observer.*

The distinction made in this work should not be interpreted as an omission of relativistic coordinate descriptions. Special relativity provides a consistent mathematical procedure for assigning space and time coordinates, frequency, and wavelength to electromagnetic phenomena as described from different inertial reference frames.

The present work addresses a different question. It distinguishes between the physical electromagnetic process itself and the coordinate description assigned to that process by an observer. Different observers may assign different coordinates and different measured temporal and spatial quantities to the same physical event. These descriptions are not treated here as separate electromagnetic entities.

The objective of the present analysis is therefore not to replace the relativistic transformation of observations. Relativistic coordinate transformations are left to the established formalism of special relativity. The purpose here is instead to identify which properties of the electromagnetic field are physically preserved, modified, or reconstructed during interaction with an optical element.

Accordingly, throughout this paper a distinction is maintained between

the electromagnetic entity and its physical interaction with matter

and

the observer-dependent description of that interaction.

This distinction becomes particularly important in Figure 1. The two oppositely propagating electromagnetic waves are physically identical apart from their direction of propagation. A moving observer encounters them at different rates. The resulting observer-dependent descriptions do not imply that the original electromagnetic structures must themselves be physically different.

The subsequent analysis therefore concentrates primarily on the physical interaction between the electromagnetic field and the optical element. Coordinate transformations between observers are used only when they are necessary to relate measurements made in different reference systems

The waves on Figure 1 have identical intrinsic frequency f and wavelength λ and propagate in opposite directions with velocity c. The stationary observer encounters both waves symmetrically. The moving observer approaches one wave and moves in the same direction as the other. The figure separates the physical structure of the waves from the rate at which this structure passes a moving observer.

The importance of Figure 1 is that both waves remain physically equivalent. Their wavelength, field structure, and original temporal periodicity are identical. Only the motion of the second observer relative to the two propagating structures is different.

Assume that the moving observer travels to the left with velocity v. The wave propagating to the right approaches the observer, whereas the wave propagating to the left moves in the same direction as the observer.

For the right-moving wave, the rate at which the spatial structure crosses the observer is determined by the relative crossing velocity

$$u_{\mathrm{cross},+} = c + v$$

For the left-moving wave,

$$u_{\mathrm{cross},-} = c - v$$

The wavelength itself has not been physically modified by the motion of the observer. The spatial separation between equivalent phases of each electromagnetic structure therefore remains

$$\lambda_{\mathrm{obs},+} = \lambda_{\mathrm{obs},-} = \lambda$$

However, the number of successive periods crossing the moving observer per unit time is different in the two directions.

For the approaching wave,

$$f_+ = \frac{c+v}{\lambda}$$

and for the receding wave,

$$f_- = \frac{c-v}{\lambda}$$

Using

$$f = \frac{c}{\lambda}$$

these expressions become

$$f_+ = f\left(1 + \frac{v}{c}\right)$$

and

$$f_- = f\left(1 - \frac{v}{c}\right)$$

The moving observer therefore records two different temporal passage rates even though the two electromagnetic waves have identical physical structures.

This distinction is central to the present model. The quantities f_+ and f_- do not represent two physically reconstructed electromagnetic waves. They describe the rates at which the moving observer crosses two otherwise identical wave structures.

The relation measured by the moving observer is therefore

$$f_{\text{obs}}\lambda = u_{\text{cross}}$$

rather than necessarily

$$f_{\text{obs}}\lambda = c$$

For the approaching wave,

$$f_+\lambda = c + v$$

and for the wave travelling in the same direction as the observer,

$$f_-\lambda = c - v$$

The essential point is that the electromagnetic entity and the observer-dependent rate of passage must not be treated as the same physical quantity. The wave itself preserves its spatial organization, whereas the observer may encounter this organization at different rates depending on relative motion.

This leads to a useful distinction between **wave frequency** and **crossing frequency**. The wave frequency f belongs to the organized electromagnetic structure in the propagation system in which the wave was formed. The crossing frequency describes how rapidly that structure passes a particular observer,

$$f_{\text{cross}} = \frac{u_{\text{cross}}}{\lambda}$$

For a stationary observer in the original propagation system,

$$u_{\text{cross}} = c$$

and therefore

$$f_{\text{cross}} = f$$

For a moving observer, however,

$$f_{\text{cross}} \neq f$$

without requiring any physical reconstruction of the electromagnetic wave itself.

The symmetric arrangement in Figure 1 is especially useful because the same moving observer simultaneously encounters one wave with crossing velocity c+v and the other with crossing velocity c-v. The difference in the measured temporal rates therefore arises from the observer's motion relative to the waves, not from an intrinsic difference between the two electromagnetic entities.

This result provides the kinematic basis for the optical interactions analysed in the following sections. An optical element moving relative to an electromagnetic wave encounters the same spatial structure according to the same principle. The crucial additional question is whether the optical element merely interacts with and preserves the existing structure, as in continuous propagation or reflection, or whether it spatially disrupts the structure and participates in the formation of a new electromagnetic wave.

3.1 Radial Motion and Preservation of Wavelength

The distinction developed above has a direct consequence for longitudinal, or radial, relative motion.

Within the present model, the wavelength of an already formed electromagnetic wave represents the physical spatial separation between successive equivalent phases of its organized field structure. Relative motion along the direction of propagation changes the rate at which this structure is encountered, but does not by itself reconstruct or compress the existing spatial structure.

For an incident wave with wavelength

$$\lambda_0$$

the model therefore predicts for purely longitudinal relative motion

$$\lambda_{\mathrm{dir}} = \lambda_0$$

and consequently

$$\Delta\lambda_{\parallel} = 0$$

as long as the wave has not undergone a physical interaction that modifies or reconstructs its spatial organization.

The temporal rate at which the same spatial structure reaches an observer or optical element is different. If the relative radial velocity is v_r, the crossing velocity is

$$u_{\mathrm{cross}} = c \pm v_r$$

and the corresponding interaction frequency is

$$f_{\mathrm{int}} = \frac{c \pm v_r}{\lambda_0}$$

where the sign depends on whether the observer or optical element approaches or recedes from the incoming wave.

Thus, within the present kinematic model,

$$\Delta f_{\mathrm{int}} \neq 0$$

can occur while

$$\Delta\lambda_{\parallel} = 0$$

The distinction is physical. Radial motion changes how rapidly successive periods of the existing wave structure are encountered; it does not, by itself, provide a mechanism for changing the spatial separation between those periods.

The same principle is applied when the relative radial motion is described as motion of the source rather than motion of the observer. Once the electromagnetic wave has been formed and is propagating freely, the later increase or decrease of the source–observer distance does not, within the present model, continuously stretch or compress the already propagating spatial field structure. The radial motion appears in the temporal interaction rate at the observer.

This prediction differs from the conventional interpretation in which a Doppler shift is represented by corresponding transformed values of frequency and wavelength while the locally measured vacuum propagation velocity remains c. The present model instead separates three quantities:

$$\lambda_{\mathrm{dir}}$$

—the spatial periodicity carried by the existing wave,

$$f_{\mathrm{int}}$$

—the temporal rate at which that structure is encountered,

and

$$u_{\mathrm{cross}}$$

—the corresponding crossing velocity.

For purely longitudinal relative motion, the proposed distinction can therefore be summarized as

$$\lambda_{\mathrm{dir}} = \lambda_0, \qquad f_{\mathrm{int}} = \frac{c \pm v_r}{\lambda_0}$$

The wavelength can change only if a physical interaction modifies the propagation conditions or reconstructs the spatial organization of the wave. A prism can change the wavelength continuously while the wave propagates in a different medium. A diffraction grating is proposed later in this work to destroy the original spatial organization and establish a new wavelength. Pure radial motion alone does neither.

This distinction is experimentally important. A structure-preserving wavelength measurement, such as the Fabry–Pérot measurement discussed later, should continue to respond to the existing spatial periodicity

$$\lambda_{\mathrm{dir}} = \lambda_0$$

whereas an optical interaction that reconstructs the wave may establish a different wavelength from the temporal interaction frequency.

The present work does not attempt to resolve the distinction between different interpretations of wavelength through a conceptual discussion alone. The proposed model treats the spatial periodicity of an already formed electromagnetic wave as a physical property that is not altered merely by the radial motion of an observer. Relativistic descriptions assign wavelength and frequency according to the observer's reference frame. Rather than deciding between these descriptions by interpretation, the present work seeks an experimental distinction through independent measurements of spatial and temporal periodicity.

The comparison between these two outcomes provides the basis for the differential astronomical experiment developed in Part C2.

4. Interaction Velocity at a Moving Optical Element

The previous section considered the rate at which an electromagnetic wave structure passes a moving observer. The same kinematic principle applies when the moving object is not merely an observer, but an optical element that physically interacts with the electromagnetic field.

An important distinction must therefore be made between the propagation velocity of the electromagnetic wave as an entity and the velocity with which that wave encounters a moving optical element.

Consider an electromagnetic wave propagating in the laboratory frame with velocity

c

and characterized by

$$c = f\lambda$$

Let an optical element move along the direction of propagation with velocity v.

If the optical element moves toward the incoming wave, the rate at which the electromagnetic structure reaches the element is

$$u_{\text{int}} = c + v$$

If the optical element moves away from the incoming wave, the interaction velocity becomes

$$u_{\text{int}} = c - v$$

These expressions do not redefine the propagation velocity of the electromagnetic wave itself. The wave remains characterized by its original propagation velocity c in the laboratory frame. The quantities c+v and c-v describe the relative rate at which the existing electromagnetic structure encounters the moving optical element.

The corresponding interaction frequency is determined by the number of spatial periods arriving at the optical element per unit time,

$$f_{\text{int}} = \frac{u_{\text{int}}}{\lambda}$$

For an optical element moving toward the incoming wave,

$$f_{\text{int},+} = \frac{c + v}{\lambda}$$

Using

$$f = \frac{c}{\lambda}$$

this becomes

$$f_{\text{int},+} = f\left(1 + \frac{v}{c}\right)$$

For an optical element moving away from the incoming wave,

$$f_{\text{int},-} = \frac{c - v}{\lambda}$$

or

$$f_{\text{int},-} = f\left(1 - \frac{v}{c}\right)$$

The interaction frequency must not be confused with the frequency assigned to the electromagnetic wave by a stationary laboratory observer.

In the laboratory frame, the incident wave remains characterized by

$$f_{\text{lab}} = f$$

whereas the moving optical element encounters successive periods at the rate

$$f_{\text{int}} \neq f$$

whenever

$$v \neq 0$$

The distinction can therefore be summarized as

$$f_{\text{lab}} = \frac{c}{\lambda}$$

while

$$f_{\text{int}} = \frac{c \pm v}{\lambda}$$

The first quantity describes the temporal periodicity of the electromagnetic wave in the laboratory description. The second describes the temporal rate of physical interaction between that same spatial wave structure and the moving optical element.

This distinction becomes especially important because an optical element does more than observe the electromagnetic field. It may modify the field, redirect it, continuously deform it, or spatially interrupt it. The subsequent evolution of the electromagnetic wave can therefore depend on the interaction frequency even though the incident wave itself has not changed before reaching the optical element.

The general sequence may be written as

$$(f, \lambda, c) \longrightarrow u_{\text{int}} = c \pm v \longrightarrow f_{\text{int}} = \frac{c \pm v}{\lambda}$$

At this stage, however, no change of the electromagnetic wave itself has yet been assumed. The quantities u_{int} and f_{int} describe only the conditions at which the incident wave reaches the optical element.

What happens next depends on the physical nature of the optical interaction.

If the optical element preserves the organized electromagnetic structure, the incident wave can remain the same physical entity while being continuously deformed or redirected. This is the case considered later for a prism and an ideal mirror.

If the optical element spatially destroys the organized structure, the interaction frequency may become a boundary condition for the formation of a new electromagnetic wave. This is the mechanism proposed later for a diffraction grating.

The distinction can therefore be expressed schematically as

$$\text{incident wave} \longrightarrow f_{\text{int}} \longrightarrow \text{optical interaction}$$

followed either by

$$\text{preservation of the existing wave structure}$$

or by

$$\text{destruction and reconstruction of the wave structure}$$

The interaction velocity and interaction frequency therefore provide the common kinematic starting point for all optical elements considered in this work. The physical difference between a prism, a mirror, a Fabry–Pérot interferometer, and a diffraction grating arises only after the electromagnetic wave reaches the optical element.

5. Continuous Propagation Through a Prism

A prism interacts with an electromagnetic wave in a fundamentally different way from a diffraction grating. The wave is not spatially divided into separated transmitted regions. Instead, the electromagnetic field enters a

continuous material medium in which the local propagation conditions are modified by the material properties.

For a homogeneous isotropic medium, the propagation velocity is determined by the permittivity and permeability,

$$u = \frac{1}{\sqrt{\varepsilon\mu}}$$

For free space,

$$c = \frac{1}{\sqrt{\varepsilon_0\mu_0}}$$

When the electromagnetic wave enters the prism, the change in ε and μ changes the propagation velocity from c to u.

The temporal periodicity of the field remains continuous across the boundary. For a stationary prism,

$$f_{\text{inside}} = f_{\text{in}}$$

Because the propagation velocity inside the prism is reduced, the wavelength inside the material becomes

$$\lambda_{\text{inside}} = \frac{u}{f}$$

and therefore

$$\lambda_{\text{inside}} = \lambda\frac{u}{c}$$

Since typically

u<c

the wavelength inside the prism is smaller than the wavelength in free space,

$$\lambda_{\text{inside}} < \lambda$$

The important point is that this change does not require destruction and reconstruction of the electromagnetic wave. The electric and magnetic fields remain continuously connected while adapting to the changed propagation conditions.

The transition can therefore be represented as

$$(c, f, \lambda) \longrightarrow (u, f, \lambda_{\text{inside}})$$

while the wave propagates inside the prism.

At the exit surface, the electromagnetic field returns from the material medium to free space. The local propagation velocity therefore returns to

c

while the temporal periodicity remains

$$f_{\text{out}} = f$$

The free-space wavelength is consequently restored,

$$\lambda_{\text{out}} = \frac{c}{f}$$

and therefore

$$\lambda_{\text{out}} = \lambda_{\text{in}}$$

The complete process may thus be written as

$$(c, f, \lambda) \longrightarrow (u, f, \lambda_{\text{inside}}) \longrightarrow (c, f, \lambda)$$

The prism therefore changes the geometry of the electromagnetic wave only while the wave propagates inside the material. After the wave returns to free space, the original relation between propagation velocity, frequency, and wavelength is recovered.

This continuous transformation is important for the physical interpretation adopted in the present work. The prism does not act as a new source of electromagnetic radiation. The field entering the prism and the field leaving it are treated as the same electromagnetic entity evolving continuously through different propagation conditions.

For this reason, the wavelength existing before the prism is not destroyed. It is temporarily modified by the material propagation velocity and restored when the wave returns to free space.

The situation becomes more interesting when the prism itself moves relative to the incoming wave.

Let the prism move toward the incoming wave with velocity v. The wave then reaches the entrance surface with interaction velocity

$$u_{\text{int}} = c + v$$

and interaction frequency

$$f_{\text{int}} = \frac{c + v}{\lambda}$$

or

$$f_{\text{int}} = f\left(1 + \frac{v}{c}\right)$$

This interaction frequency characterizes the rate at which successive periods of the incident wave arrive at the moving prism surface. It does not imply that the laboratory frequency of the incident wave has changed.

In the laboratory system,

$$f_{\text{lab}} = f$$

still describes the original wave.

The moving prism therefore experiences a different temporal rate at its entrance boundary, but the incident electromagnetic structure itself has not been spatially destroyed before entering the prism.

According to the model developed here, the subsequent propagation through the prism remains a continuous electromagnetic process. The material parameters modify the local propagation conditions, but the wave does not pass through a stage in which its spatial structure is fragmented into independent field regions.

This distinction is central. At a prism boundary, the electromagnetic field undergoes a continuous adjustment governed by the material parameters,

$$\varepsilon, \mu$$

whereas at a diffraction grating the incident field is spatially interrupted by alternating transparent and opaque regions.

The prism can therefore be represented schematically as

organized wave
⟶ continuous material deformation
⟶ organized wave

rather than

organized wave ⟶ spatial destruction
⟶ new wave

The absence of spatial fragmentation is the reason why the prism is classified in this work as a structure-preserving optical element.

The same principle will next be examined for reflection from a moving mirror. Unlike the prism, the mirror reverses the propagation direction of the wave, but it likewise preserves an organized electromagnetic field rather than producing the spatially fragmented reconstruction region characteristic of a diffraction grating.

6. Reflection from a Moving Mirror

An ideal mirror represents a second class of optical interaction in which the organized electromagnetic structure is preserved. Unlike a prism, the mirror does not transmit the wave through a material volume. Instead, it reverses the propagation direction while maintaining the coherence and spatial organization of the incident field.

For a stationary mirror, the incident wave may be characterized by

$$c = f\lambda$$

and the reflected wave preserves the same wavelength and frequency,

$$\lambda_{\text{out}} = \lambda_{\text{in}} = \lambda$$

$$f_{\text{out}} = f_{\text{in}} = f$$

while the propagation direction is reversed.

The present work extends this picture to a moving mirror.

Consider a mirror moving toward the incident wave with velocity v. In the laboratory frame, the incident electromagnetic wave propagates with velocity c, whereas the mirror approaches it. The interaction velocity at the mirror is therefore

$$u'_{\mathrm{in}} = c + v$$

The prime denotes quantities described relative to the moving mirror.

The wavelength of the incident electromagnetic structure is assumed to remain

$$\lambda'_{\mathrm{in}} = \lambda$$

because the motion of the mirror does not physically reconstruct the incident wave before the interaction occurs.

The rate at which successive periods of the incident wave reach the mirror is therefore

$$f'_{\mathrm{in}} = \frac{c+v}{\lambda}$$

or

$$f'_{\mathrm{in}} = f\left(1+\frac{v}{c}\right)$$

This quantity is the interaction frequency at the mirror. It is not the frequency measured by the stationary laboratory observer, for whom the incident wave remains characterized by

$$f_{\mathrm{lab}} = f$$

The central assumption of the present model is that an ideal mirror preserves the organized electromagnetic structure of the wave during reflection. The interaction does not pass through a spatially fragmented reconstruction region. Instead, the incident structure is redirected.

Accordingly, relative to the mirror, the reflected wave preserves the magnitude of the incident propagation velocity,

$$u'_{\mathrm{out}} = u'_{\mathrm{in}} = c + v$$

the wavelength,

$$\lambda'_{\mathrm{out}} = \lambda'_{\mathrm{in}} = \lambda$$

and therefore the temporal periodicity,

$$f'_{\mathrm{out}} = f'_{\mathrm{in}}$$

or

$$f'_{\mathrm{out}} = f\left(1+\frac{v}{c}\right)$$

The mirror therefore changes primarily the propagation direction while preserving the incident electromagnetic structure relative to the mirror.

The process can be written schematically as

$$(c+v, f'_{\mathrm{in}}, \lambda) \longrightarrow (c+v, f'_{\mathrm{out}}, \lambda)$$

with

$$f'_{\mathrm{out}} = f'_{\mathrm{in}}$$

and opposite propagation directions before and after reflection.

The same reflected wave can then be described in the laboratory frame.

Because the mirror moves toward the source with velocity v, and the reflected wave propagates away from the mirror in the same direction as the mirror motion, the reflected wave has the laboratory propagation velocity

$$u_{\mathrm{out}} = c + 2v$$

Within the present model, the spatial structure of the reflected wave remains unchanged by the reflection process,

$$\lambda_{\mathrm{out}} = \lambda$$

while the rate at which this reflected structure passes a stationary laboratory observer is

$$f_{\mathrm{out}} = \frac{c+2v}{\lambda}$$

Using

$$f = \frac{c}{\lambda}$$

this becomes

$$f_{\text{out}} = f\left(1 + \frac{2v}{c}\right)$$

Thus, for a mirror approaching the source,

$$u_{\text{out}} = c + 2v$$

$$\lambda_{\text{out}} = \lambda$$

$$f_{\text{out}} = f\left(1 + \frac{2v}{c}\right)$$

The opposite case follows directly by replacing

$$v \to -v$$

For a mirror moving away from the source, the interaction velocity becomes

$$u'_{\text{in}} = c - v$$

the interaction frequency becomes

$$f'_{\text{in}} = f\left(1 - \frac{v}{c}\right)$$

and the reflected wave has the laboratory propagation velocity

$$u_{\text{out}} = c - 2v$$

while the wavelength remains

$$\lambda_{\text{out}} = \lambda$$

and the laboratory frequency becomes

$$f_{\text{out}} = f\left(1 - \frac{2v}{c}\right)$$

The two cases can therefore be summarized as

$$u_{\text{out}} = c \pm 2v$$

$$f_{\text{out}} = f\left(1 \pm \frac{2v}{c}\right)$$

$$\lambda_{\text{out}} = \lambda$$

where the upper sign corresponds to a mirror moving toward the source and the lower sign to a mirror moving away from it.

This result illustrates the meaning of structure preservation in the present model. The mirror does not preserve the laboratory description of the incident wave. Instead, it preserves the electromagnetic entity as it arrives at the mirror. The incident propagation conditions relative to the mirror become the propagation conditions of the reflected wave relative to the mirror, with only the direction reversed.

The mirror therefore differs fundamentally from a diffraction grating. A mirror redirects an organized Maxwellian structure,

$$\begin{aligned}\text{organized wave} &\longrightarrow \text{reflection} \\ &\longrightarrow \text{organized wave}\end{aligned}$$

whereas a diffraction grating is proposed to produce

$$\begin{aligned}\text{organized wave} &\longrightarrow \text{spatial disruption} \\ &\longrightarrow \text{reconstruction} \\ &\longrightarrow \text{new organized wave}\end{aligned}$$

This distinction is also the basis for the treatment of the Fabry–Pérot interferometer in the following section. Since a Fabry–Pérot system is based on repeated reflection between partially reflecting surfaces, its operation can be analysed as repeated structure-preserving interactions rather than as repeated destruction and reconstruction of the electromagnetic wave.

7. Fabry–Pérot Interferometer

A Fabry–Pérot interferometer consists of two partially reflecting parallel surfaces that repeatedly reflect an electromagnetic wave before a fraction of the field leaves the cavity. Within the framework developed in this work, the essential point is that each reflection is treated as a structure-preserving interaction.

The electromagnetic wave entering the interferometer is therefore not spatially fragmented in the same manner as at a diffraction grating. Instead, the organized field structure is repeatedly redirected between the two reflecting surfaces.

For a stationary Fabry–Pérot interferometer, let the incident wave be characterized by

$$c = f\lambda$$

The distance between the reflecting surfaces is denoted by

L

For normal incidence, successive transmitted components differ by an additional round-trip path length

$$\Delta s = 2L$$

and the corresponding phase difference is

$$\Delta\phi = \frac{2\pi}{\lambda}\Delta s$$

Therefore,

$$\Delta\phi = \frac{4\pi L}{\lambda}$$

Constructive transmission occurs when the round-trip path corresponds to an integer number of wavelengths,

$$2L = m\lambda$$

where m is an integer.

For oblique propagation inside the cavity, the corresponding geometrical condition is

$$2L\cos\theta = m$$

where θ is the propagation angle inside the cavity.

The important feature of these relations is that the Fabry–Pérot interferometer responds directly to the spatial periodicity of the electromagnetic field. The resonance condition is determined by the number of wavelengths that fit into the optical path between the reflecting surfaces.

Within the present model, this gives the Fabry–Pérot interferometer a fundamentally different role from a diffraction grating.

At each reflecting surface, the wave remains an organized electromagnetic structure. The reflection process can therefore be represented as

$$\text{organized wave} \longrightarrow \text{reflection} \longrightarrow \text{organized wave}$$

and the repeated propagation inside the cavity as

$$\text{reflection} \longrightarrow \text{propagation} \longrightarrow \text{reflection} \longrightarrow \text{propagation}$$

No stage of spatial fragmentation and reconstruction is required.

The Fabry–Pérot interferometer can therefore compare the existing wavelength of the electromagnetic structure directly with a geometrical length scale defined by the cavity.

This leads to an important interpretation used later in this work:

$$\lambda_{\mathrm{FPI}} = \lambda_{\mathrm{wave}}$$

where λ_{wave} denotes the spatial periodicity of the electromagnetic structure entering and propagating inside the interferometer.

The Fabry–Pérot interferometer does not need to reconstruct this wavelength from a separately measured frequency. Instead, the spatial field structure itself determines whether the resonance condition is satisfied.

This distinction becomes particularly important when the interferometer moves relative to the incoming electromagnetic wave.

Suppose the complete Fabry–Pérot interferometer moves toward the incoming wave with velocity v. Before the wave enters the cavity, the interaction velocity at the first reflecting surface is

$$u_{\mathrm{int}} = c + v$$

and the interaction frequency is

$$f_{\mathrm{int}} = \frac{c+v}{\lambda}$$

or

$$f_{\mathrm{int}} = f\left(1 + \frac{v}{c}\right)$$

As in the moving-mirror case, this interaction frequency describes the rate at which successive periods arrive at the moving optical surface. It does not imply that the spatial

structure of the incident wave has already changed.

The first partially reflecting surface interacts with the incoming wave according to the same structure-preserving principle developed for a moving mirror. The transmitted component entering the cavity therefore retains an organized electromagnetic structure rather than being reconstructed from a spatially fragmented field.

The same principle applies to the subsequent reflections between the two surfaces. Since both mirrors belong to the same rigid Fabry–Pérot system, the wave is repeatedly reflected within one moving optical structure.

The resonance process can therefore be understood as repeated comparison between the spatial periodicity of the wave and the geometrical separation of the mirrors.

The central quantity remains

$$\frac{2L}{\lambda}$$

for normal incidence, or

$$\frac{2L\cos\theta}{\lambda}$$

for oblique incidence.

Resonance occurs when this ratio is an integer,

$$\frac{2L}{\lambda} = m$$

or, more generally,

$$\frac{2L\cos\theta}{\lambda} = m$$

The physical significance is that the Fabry–Pérot interferometer responds to the spatial organization of the wave itself.

This allows the Fabry–Pérot interferometer to play a particularly important role in the experimental part of the present work. If a moving observer measures a changed temporal crossing frequency while the electromagnetic wave retains its original spatial periodicity, a Fabry–Pérot interferometer should continue to respond to that spatial periodicity.

The distinction can be expressed as

$$f_{\text{cross}} \neq f$$

while

$$\lambda_{\text{FPI}} =$$

provided that the interaction with the interferometer preserves the electromagnetic structure rather than reconstructing it.

The Fabry–Pérot interferometer therefore belongs to the same general class as the ideal mirror and the prism: optical systems that preserve the continuity of the electromagnetic structure.

The physical mechanisms are nevertheless different:

prism: continuous deformation

mirror: continuous redirection

Fabry--Pérot interferometer: repeated continuous redirection and interference.

In all three cases, the wave remains an organized electromagnetic structure throughout the interaction.

The diffraction grating considered in the following section is proposed to behave differently. Instead of repeatedly redirecting an intact wave, it spatially truncates the electromagnetic field into separated transmitted regions. The distinction between direct preservation of wavelength and reconstruction of wavelength therefore becomes experimentally accessible by comparing Fabry–Pérot and diffraction-grating measurements of the same radiation.

8. Spatial Disruption at a Diffraction Grating

A diffraction grating interacts with an electromagnetic wave in a fundamentally different way from a prism, mirror, or Fabry–Pérot interferometer. In the latter systems, the electromagnetic field remains spatially organized throughout the interaction. A diffraction grating, by contrast, contains alternating transmitting and blocking regions that directly interrupt the spatial distribution of the incident field.

Consider an incident electromagnetic field

$$E_{\mathrm{in}}(x, y, t)$$

arriving at a diffraction grating. The effect of the grating can be represented by a spatial transmission function

A(x,y)

so that immediately behind the grating the transmitted field is

$$E_{\mathrm{tr}}(x, y, t) = A(x, y)E_{\mathrm{in}}(x, y, t)$$

For an idealized grating, the transmission function alternates between transmitting and blocking regions. In the simplest representation,

A(x,y)=1

in the open regions and

A(x,y)=0

in the opaque regions.

The electromagnetic field immediately behind the grating is therefore no longer a spatially continuous copy of the incident wave. Parts of the incident structure are transmitted, while other parts are removed.

The spatial gradient of the transmitted field is

$$\nabla E_{\mathrm{tr}} = A\nabla E_{\mathrm{in}} + E_{\mathrm{in}}\nabla A$$

The first term represents the spatial variation already present in the incident electromagnetic wave. The second term is produced directly by the grating.

At the edges of the transmitting regions,

$$\nabla A \neq 0$$

and may become very large over a short distance. The grating therefore introduces spatial field gradients that did not exist in the original freely propagating wave.

An equivalent relation applies to the magnetic field,

$$B_{\mathrm{tr}}(x, y, t) = A(x, y)B_{\mathrm{in}}(x, y, t)$$

with

$$\nabla B_{\mathrm{tr}} = A\nabla B_{\mathrm{in}} + B_{\mathrm{in}}\nabla A$$

The electric and magnetic fields behind the grating must continue to evolve according to Maxwell's equations. However, their spatial distribution immediately after transmission is no longer the smooth spatial organization of the incident wave.

This is the principal physical distinction between a diffraction grating and the optical elements considered in the previous sections.

For a prism,

$$\begin{aligned}&\text{continuous field}\\ &\longrightarrow \text{continuous deformation}\\ &\longrightarrow \text{continuous field}\end{aligned}$$

For a mirror,

$$\begin{aligned}&\text{continuous field} \longrightarrow \text{redirection}\\ &\longrightarrow \text{continuous field}\end{aligned}$$

For a Fabry--Pérot interferometer,

$$\begin{aligned}&\text{continuous field} \longrightarrow \text{repeated reflection}\\ &\longrightarrow \text{continuous field}\end{aligned}$$

A diffraction grating instead produces

$$\begin{aligned}&\text{organized field} \longrightarrow \text{spatial fragmentation}\\ &\longrightarrow \text{nonuniform transmitted field}\end{aligned}$$

Immediately behind the grating, it is therefore not necessary to assign a single wavelength to the complete transmitted field. The original

spatial periodicity has been interrupted by the transmission function of the grating.

The field still possesses electromagnetic energy and temporal variation, but its previous ordered spatial structure has been strongly disturbed.

This region will be referred to in the present work as the **electromagnetic reconstruction region**.

The term does not imply hydrodynamic turbulence. It describes a region in which the electric and magnetic fields remain governed by Maxwell's equations but no longer possess the simple ordered spatial structure of the incident propagating wave.

The essential point is that spatial disruption does not automatically destroy temporal periodicity.

For a stationary grating, the transmission function is independent of time,

$$\frac{\partial A}{\partial t} = 0$$

If the incident field contains a temporal dependence of the form

$$E_{\text{in}}(x, y, t) = E_0(x, y)\cos\big(\omega t - \phi(x, y)\big)$$

then immediately behind the grating,

$$E_{\text{tr}}(x, y, t) = A(x, y)E_0(x, y)\cos\big(\omega t - \phi(x, y)\big)$$

The grating strongly modifies the spatial amplitude distribution but does not introduce a new temporal frequency into this expression.

Therefore,

$$\omega_{\text{tr}} = \omega_{\text{in}}$$

and

$$f_{\text{tr}} = f_{\text{in}}$$

for a stationary grating.

This provides an important physical asymmetry between frequency and wavelength during the interaction.

The temporal periodicity can survive the spatial interruption,

$$f_{\text{after}} = f_{\text{before}}$$

while the original ordered wavelength need not survive as a complete spatial structure immediately behind the grating.

Schematically,

$$(f, \lambda) \longrightarrow (f, \text{spatially disrupted field})$$

The proposed mechanism therefore does not require frequency and wavelength to behave identically during the interaction.

This distinction becomes especially important for a moving grating.

If the grating moves toward the incoming wave with velocity v, the incident electromagnetic structure reaches the grating with interaction velocity

$$u_{\text{int}} = c + v$$

The rate at which successive periods arrive at the grating is then

$$f_{\text{int}} = \frac{c + v}{\lambda}$$

or

$$f_{\text{int}} = f\left(1 + \frac{v}{c}\right)$$

The incident wave in the laboratory frame still has the frequency

$$f_{\text{lab}} = f$$

but the moving grating is physically driven by the electromagnetic field at the interaction rate

$$f_{\text{int}}$$

The distinction is therefore between the frequency of the incident wave in the laboratory and the temporal frequency of the electromagnetic interaction at the grating.

For a grating moving away from the incident wave,

$$u_{\text{int}} = c - v$$

and

$$f_{\text{int}} = f\left(1 - \frac{v}{c}\right)$$

The spatial interruption produced by the grating occurs under these local interaction conditions.

This leads to the central hypothesis developed in the following section. Once the original ordered spatial structure has been disrupted, the electromagnetic field behind the grating must reorganize before a new freely propagating ordered wave can emerge.

The temporal periodicity available during this reconstruction is determined by the electromagnetic interaction at the grating, whereas the new spatial periodicity must be established during the subsequent formation of the propagating wave.

The diffraction grating is therefore treated not merely as an element that redirects an existing wavelength, but as an optical element capable of destroying the previous ordered spatial structure and creating the conditions from which a new wavelength is formed.

The transition considered in this work can be summarized as

ordered incident wave
⟶ spatial interruption
⟶ electromagnetic reconstruction region

The next section examines how an ordered electromagnetic wave can emerge from this reconstruction region and how its new frequency, wavelength, and propagation velocity are determined.

9. Re-Formation of the Wave Behind the Grating

The following reconstruction rule is an additional physical hypothesis of the present model; it is not derived here from Maxwell's equations alone.

The previous section described the electromagnetic field immediately behind a diffraction grating as a spatially disrupted field rather than as a complete continuation of the incident wave. The electric and magnetic fields remain governed by Maxwell's equations, but the ordered spatial structure characterized by the incident wavelength is no longer preserved as a single continuous configuration.

The next question is how a new freely propagating electromagnetic wave can emerge from this disrupted field.

Within the present model, the re-formation process is governed by two different types of information that survive the interaction in different ways:

temporal periodicity

and

spatial field distribution

The spatial field distribution is strongly altered by the grating. The temporal periodicity, however, remains available locally because the transmitted electric and magnetic fields continue to vary in time.

For a stationary grating, the transmitted field preserves the temporal frequency of the incident wave,

$$f_{\text{tr}} = f_{\text{in}}$$

while its ordered spatial wavelength is temporarily lost as a complete wave property immediately behind the grating.

The reconstruction process is therefore assumed to begin from a field that retains a definite temporal periodicity but does not yet possess the final spatial periodicity of a new freely propagating wave.

This distinction can be represented schematically as

$$(f,\lambda) \longrightarrow (f,\text{disrupted spatial field}) \longrightarrow (f,\lambda_{\text{new}})$$

The central hypothesis is that the temporal periodicity surviving at the grating determines the frequency of the newly formed wave.

For a stationary grating,

$$f_{\text{new}} = f$$

For a moving grating, the relevant temporal rate is the interaction frequency derived in the previous section,

$$f_{\text{int}} = \frac{c \pm v}{\lambda}$$

The new wave is therefore formed with

$$f_{\text{new}} = f_{\text{int}}$$

relative to the grating.

This is the key difference between the diffraction grating and the structure-preserving optical elements considered earlier. A prism, mirror, or Fabry–Pérot interferometer acts on an already organized wave. A diffraction grating is proposed to destroy the previous spatial organization and therefore to require the formation of a new one.

Once the new wave has formed, it propagates away from the grating as a regular electromagnetic wave.

Relative to the grating, the newly formed wave propagates with velocity

$$u'_{\text{new}} = c$$

where the prime denotes the reference system of the grating.

Its wavelength must therefore satisfy

$$c = f_{\text{new}}\lambda_{\text{new}}$$

and hence

$$\lambda_{\text{new}} = \frac{c}{f_{\text{new}}}$$

Using

$$f_{\text{new}} = f_{\text{int}}$$

gives

$$\lambda_{\text{new}} = \frac{c}{f_{\text{int}}}$$

For a grating moving toward the incoming wave,

$$f_{\text{int}} = f\left(1 + \frac{v}{c}\right)$$

and therefore

$$\lambda_{\text{new}} = \frac{\lambda}{1 + v/c}$$

For a grating moving away from the incoming wave,

$$f_{\text{int}} = f\left(1 - \frac{v}{c}\right)$$

and therefore

$$\lambda_{\text{new}} = \frac{\lambda}{1 - v/c}$$

The moving grating therefore changes the spatial periodicity of the newly formed wave because the frequency available during reconstruction depends on the interaction velocity.

The complete reconstruction process for a grating moving toward the incoming wave may be written as

$$(c, f, \lambda) \longrightarrow (c + v, f_{\text{int}}, \lambda) \longrightarrow (c, f_{\text{new}}, \lambda_{\text{new}})$$

with

$$f_{\text{new}} = f_{\text{int}}$$

and

$$\lambda_{\text{new}} = \frac{c}{f_{\text{new}}}$$

The first transition describes the interaction of the original wave with the moving grating. The second describes the formation of a new wave relative to the grating.

The original wavelength is therefore not transformed continuously into the new wavelength. Instead, the model proposes that the original spatial organization is interrupted

and that the new wavelength is established from the temporal periodicity available during reconstruction.

This distinction is central:

$$\lambda_{\text{before}} \neq \lambda_{\text{new}}$$

may occur even though the temporal interaction remains continuous.

For a stationary grating,

$$v=0$$

and therefore

$$f_{\text{int}} = f$$

which gives

$$\lambda_{\text{new}} = \frac{c}{f} = \lambda$$

Thus, a stationary diffraction grating reconstructs a wave with the same wavelength as the incident wave. The distinction between preservation and reconstruction is therefore not visible in the stationary case.

Only when relative motion exists does the difference become measurable.

For a moving grating,

$$f_{\text{int}} \neq f$$

and consequently

$$\lambda_{\text{new}} \neq \lambda$$

The diffraction grating therefore provides a mechanism by which relative motion can modify the spatial periodicity of the outgoing wave without requiring the original incident wave itself to change before reaching the grating.

This point is especially important for the experimental interpretation developed later in the paper. A stationary laboratory observer can continue to assign the original frequency f to the incident electromagnetic wave while the moving grating experiences an interaction frequency f_{int}. The newly formed wave can then possess a wavelength determined by this interaction frequency.

The grating thus acts as a boundary between two electromagnetic entities:

$$\text{incident wave} \longrightarrow \text{grating} \longrightarrow \text{new wave}$$

The incident wave is characterized by its original spatial structure,

$$(f, \lambda)$$

whereas the new wave is characterized, relative to the grating, by

$$(f_{\text{int}}, \lambda_{\text{new}})$$

with

$$c = f_{\text{int}} \lambda_{\text{new}}$$

The significance of this mechanism becomes clearer when the same physical event is described from two different reference systems. In the following section, the interaction is therefore examined both from the laboratory system and from the system of the grating. This comparison will distinguish the frequency of the electromagnetic wave, the frequency of interaction at the grating, and the wavelength reconstructed behind the grating.

10. The Same Event in Two Reference Systems

The interaction between an electromagnetic wave and a moving diffraction grating can be described from two reference systems without introducing two different physical events. The electromagnetic interaction is unique; only the system from which the event is described changes.

Consider a source and a laboratory observer at rest in the laboratory system. A diffraction grating, together with an observer located at the grating, moves toward the incoming light with velocity v.

The same event can therefore be described from:

- the **laboratory system**, in which the source and laboratory observer are stationary and the grating moves;
- the **observatory system**, in which the grating and the observer attached to it are stationary and the source moves.

The distinction between these descriptions is essential because the frequency of the light, the frequency of interaction with the grating, and the wavelength reconstructed at the grating represent different physical quantities.

10.1 Description in the Laboratory System

Before reaching the grating, the incident electromagnetic wave is characterized in the laboratory system by

$$u_{\text{in,lab}} = c$$

$$f_{\text{in,lab}} = f$$

and

$$\lambda_{\text{in,lab}} =$$

with

$$c = f\lambda$$

The grating moves toward the incident wave with velocity v. Consequently, the electromagnetic structure reaches the grating with the interaction velocity

$$u_{\text{int}} = c + v$$

The rate at which successive spatial periods reach the grating is therefore

$$f_1 = \frac{c+v}{\lambda}$$

or

$$f_1 = f\left(1 + \frac{v}{c}\right)$$

The quantity f_1 is not the frequency assigned to the incident light by the stationary laboratory observer. The laboratory observer continues to describe the incident wave by the frequency

$$f_{\text{lab}} = f$$

The quantity f_1 instead describes the temporal rate of interaction between the incoming electromagnetic structure and the moving grating.

At the grating, the ordered spatial structure is disrupted. According to the mechanism proposed in the previous section, the temporal periodicity of the interaction survives this disruption and determines the formation of the new electromagnetic wave.

The newly formed wave therefore acquires a new wavelength

$$\lambda_1$$

whose value is determined most directly in the system of the grating.

After leaving the grating, the new wave propagates to the right while the grating continues to move to the left. Since the new wave propagates with velocity c relative to the grating, its propagation velocity in the laboratory system is

$$u_{\text{out,lab}} = c - v$$

The laboratory description of the complete event is therefore

$$(c, f, \lambda) \longrightarrow (c+v, f_1, \lambda) \longrightarrow (c-v, f, \lambda_1)$$

The middle expression does not describe a freely propagating wave. It describes the conditions of interaction at the moving grating.

The laboratory observer therefore distinguishes between the wave frequency

f

and the interaction frequency

$$f_1$$

even though both refer to the same physical event.

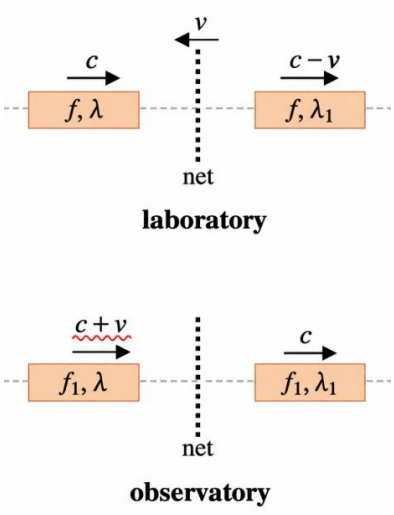

Figure 2. The same grating interaction described from the laboratory and observatory reference systems.

In the laboratory system, the incident wave propagates with velocity c, frequency f, and wavelength λ, while the grating moves toward the wave with velocity v. The interaction occurs at the rate f_1. After reconstruction, the wave has the new wavelength λ_1 and propagates with velocity c-v relative to the laboratory. In the observatory system the grating is stationary. The incident electromagnetic structure reaches it with velocity c+v and interaction frequency f_1. The newly formed wave leaves the stationary grating with velocity c, frequency f_1, and wavelength λ_1.

10.2 Description in the Observatory System

We now describe exactly the same physical event from the observatory attached to the grating.

The grating is stationary in this system. The incident electromagnetic structure approaches it with velocity

$$u_{\text{in,obs}} = c + v$$

Its spatial structure remains characterized by the original wavelength

$$\lambda_{\text{in,obs}} = \lambda$$

The frequency with which successive periods arrive at the stationary grating is therefore

$$f_{\text{in,obs}} = f_1$$

where

$$f_1 = \frac{c+v}{\lambda}$$

Thus the incident field at the grating is described by

$$(c+v, f_1, \lambda)$$

The grating then disrupts the original spatial organization of the field. The temporal periodicity f_1 survives the interaction and becomes the temporal periodicity of the newly formed electromagnetic wave.

Therefore,

$$f_{\text{new,obs}} = f_1$$

The grating is the source of the reconstructed wave. Relative to the stationary grating, this wave propagates with velocity

$$u_{\text{new,obs}} = c$$

Its new wavelength is consequently

$$\lambda_1 = \frac{c}{f_1}$$

Using

$$f_1 = f\left(1 + \frac{v}{c}\right)$$

gives

$$\lambda_1 = \frac{\lambda}{1 + v/c}$$

The complete observatory description is therefore

$$(c+v, f_1, \lambda) \longrightarrow (c, f_1, \lambda_1)$$

The physical role of the diffraction grating is particularly clear in this description. Before the grating, the field carries the original spatial structure λ. After the grating, the temporal periodicity f_1 is retained, but a new spatial structure λ_1 has been established.

Thus,

$$\lambda \longrightarrow \lambda_1$$

while at the grating

$$f_1 \longrightarrow f_1$$

10.3 One Event, Two Descriptions

The laboratory and observatory descriptions do not represent two different interactions. They describe the same physical sequence from two different states of motion.

In the laboratory system,

$$(c, f, \lambda) \longrightarrow (c - v, f, \lambda_1)$$

whereas in the observatory system,

$$(c + v, f_1, \lambda) \longrightarrow (c, f_1, \lambda_1)$$

The quantities f and f_1 therefore have different meanings.

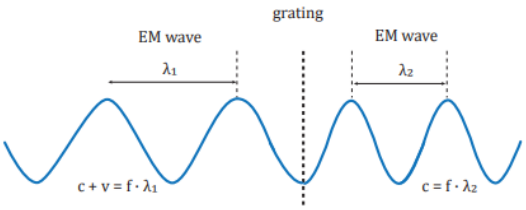

Figure 3 ***Reconstruction of the electromagnetic wave at a diffraction grating.*** *In the grating system, the incident wave reaches the grating with interaction frequency f_1. After spatial disruption, the reconstructed wave propagates with velocity c relative to the grating and acquires the wavelength $\lambda_1 = c/f_1$.*

The quantity

f

is the frequency assigned to the light in the laboratory description.

The quantity

f_1

is the temporal rate at which the electromagnetic structure interacts with the grating and, in the observatory system, the frequency of the reconstructed wave.

Their relation is

$$f_1 = f\left(1 + \frac{v}{c}\right)$$

The wavelength before the interaction is

λ

whereas after reconstruction it becomes

$$\lambda_1 = \frac{c}{f_1}$$

and therefore

$$\lambda_1 = \frac{\lambda}{1 + v/c}$$

This comparison illustrates why the relation between frequency, wavelength, and propagation velocity must be interpreted with care.

For the newly formed wave in the system of the grating,

$$c = f_1 \lambda_1$$

This equation characterizes the internal temporal and spatial structure established when the new wave is formed.

The same wave is described in the laboratory as propagating with velocity

c-v

while retaining the reconstructed spatial structure λ_1.

It therefore does not follow that the product of the frequency assigned by every observer and the wavelength of the electromagnetic entity must equal the observer-relative propagation velocity.

Within the present framework,

$$f\lambda$$

characterizes the relation between temporal and spatial structure in the propagation system in which the electromagnetic entity is

established, whereas observer-relative propagation and interaction velocities must be determined separately from relative motion.

10.4 Physical Significance

The two-reference-system description separates three quantities that must not be confused:

f

the frequency of the incident light in the laboratory system,

$$f_1$$

the interaction frequency at the moving grating,

and

$$\lambda_1$$

the new wavelength established during reconstruction.

The sequence is therefore not

$$f \longrightarrow f_1$$

as a physical change of the incident wave before it reaches the grating.

Instead, the sequence is

$$(f, \lambda) \longrightarrow f_1$$
$$\text{at the interaction} \longrightarrow (f_1, \lambda_1)\backslash$$
$$\text{for the reconstructed wave in the grating system}$$

This distinction will be essential for the experimental interpretation developed later in the paper. Frequency and wavelength measurements need not provide identical information when the optical element itself participates in the formation of a new electromagnetic wave.

The next section examines how the reconstructed wavelength λ_1 determines the propagation directions produced by a diffraction grating.

11. Diffraction Direction and Reconstructed Wavelength

The previous section established the reconstructed wavelength λ_1 of the new electromagnetic wave formed behind the diffraction grating. The next step is to determine the directions in which these reconstructed waves can propagate.

For a periodic grating with spacing d, the transmitted field immediately behind the grating is distributed over many apertures. The fields emerging from neighbouring openings combine in space, and preferred propagation directions occur when their phase relation is repeated from one grating period to the next.

For normal incidence, the geometrical path difference between radiation associated with two neighbouring grating periods is

$$\Delta \, \mathrm{s} = \mathrm{d} \sin \theta$$

where θ is the angle of the outgoing wave relative to the grating normal.

A stable diffraction direction occurs when this path difference corresponds to an integer number of reconstructed wavelengths,

$$d \sin \theta_m = m\lambda_1$$

where m is the diffraction order,

$$m = 0, \pm 1, \pm 2, \ldots$$

The important point in the present model is that the wavelength entering the diffraction condition is not assumed to be the original wavelength λ. It is the wavelength of the newly formed electromagnetic wave,

$$\lambda_1 = \frac{c}{f_1}$$

For a grating moving toward the incoming wave,

$$f_1 = \frac{c + v}{\lambda}$$

and therefore

$$\lambda_1 = \frac{\lambda}{1 + v/c}$$

The diffraction condition becomes

$$d \sin \theta_m = m \frac{\lambda}{1 + v/c}$$

For a grating moving away from the incoming wave,

$$f_1 = \frac{c - v}{\lambda}$$

and

$$\lambda_1 = \frac{\lambda}{1 - v/c}$$

so that

$$d \sin \theta_m = m \frac{\lambda}{1 - v/c}$$

Thus, within the proposed model, motion of the grating changes the diffraction angle because the wavelength reconstructed at the grating depends on the interaction frequency.

For small velocities,

$$\frac{v}{c} \ll 1$$

the reconstructed wavelength for an approaching grating may be approximated by

$$\lambda_1 \approx \lambda \left(1 - \frac{v}{c}\right)$$

and for a receding grating by

$$\lambda_1 \approx \lambda \left(1 + \frac{v}{c}\right)$$

The corresponding first-order change in diffraction angle follows from

$$\sin \theta_m = \frac{m \lambda_1}{d}$$

For a fixed diffraction order, a decrease in λ_1 shifts the diffraction maximum toward smaller $|\theta_m|$, while an increase in λ_1 shifts it toward larger $|\theta_m|$.

This provides a direct geometrical consequence of the reconstruction mechanism.

The physical sequence for a grating moving toward the incident wave is

$$(c, f, \lambda) \longrightarrow (c + v, f_1, \lambda) \longrightarrow (c, f_1, \lambda_1) \longrightarrow \theta_m$$

where the middle state

$$(c + v, f_1, \lambda)$$

describes the interaction at the grating, while

$$(c, f_1, \lambda_1)$$

describes the newly formed wave in the grating system.

The diffraction angle is therefore determined only after the new wavelength has been established.

This differs conceptually from treating the grating as an element that merely redirects an unchanged incoming wavelength. In the present model, the sequence is instead

incident spatial structure
$\longrightarrow$ spatial disruption
$\longrightarrow$ new wavelength
$\longrightarrow$ diffraction direction

The grating period d determines the allowed directions, but the wavelength entering this geometrical condition is determined by the electromagnetic reconstruction process.

11.1. Spatial Fragmentation of an Organized Electromagnetic Structure

The diffraction grating interacts with an electromagnetic wave whose electric and magnetic fields possess an organized spatial distribution. When the wave reaches the grating, its opaque regions prevent parts of this distribution from being transmitted, while the remaining regions allow separated portions of the field to continue propagating.

The transmitted field therefore no longer possesses the complete geometrical organization of the incident electromagnetic

structure. Some regions contain predominantly magnetic-field contributions, while others contain different combinations of electric and magnetic fields.

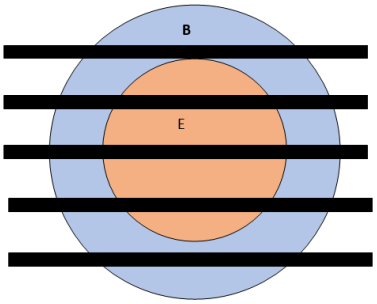

Figure 4. Spatial fragmentation of an electromagnetic wave at a diffraction grating. The opaque grating regions interrupt the organized electric E and magnetic B field structure, leaving separated and geometrically unbalanced field contributions. Within the proposed model, these fragments undergo electromagnetic redistribution and reorganization, while the temporal periodicity of the interaction provides the oscillation rhythm for the emerging wave structures.

These separated field contributions cannot be assumed to propagate indefinitely as independent stable electromagnetic structures. Their subsequent evolution must satisfy Maxwell's equations, which couple the temporal and spatial variations of the electric and magnetic fields.

Within the proposed model, the transmitted contributions may reorganize into smaller propagating electromagnetic structures. Depending on their relative phases, spatial separation, and field configurations, these structures may also interact and merge into larger organized waves.

The temporal periodicity imposed by the incident field at the grating remains an important boundary condition during this process. The reconstruction hypothesis proposes that this temporal periodicity, together with the propagation conditions, establishes the longitudinal periodicity of the resulting waves.

The central question is therefore whether this reorganization preserves the incident longitudinal phase periodicity or establishes a new spatial wavelength. This distinction is tested through the differential measurement proposed in Part C2.

11.2 Diffraction Direction in the Grating System

The simplest description is obtained in the reference system of the grating.

The newly formed wave propagates with speed

$$c$$

and wavelength

$$\lambda_1$$

at angle θ'_m, where

$$d \sin \theta'_m = m\lambda_1$$

Its velocity components are therefore

$$u'_x = c \cos \theta'_m$$

and

$$u'_y = c \sin \theta'_m$$

where the x-axis is taken normal to the grating and the y-axis parallel to its surface.

This direction represents the geometry established during the reconstruction of the outgoing electromagnetic wave.

11.3 Description of the Same Diffracted Wave in the Laboratory

If the grating itself moves relative to the laboratory, the same outgoing wave can also be described from the laboratory system.

Let the grating velocity be represented by the vector

$$v_g$$

Within the kinematic model used in this work, the laboratory velocity of the reconstructed wave is obtained from

$$\overrightarrow{u_{lab}} = \overrightarrow{u'} + \overrightarrow{v_g}$$

Where

$$|\overrightarrow{u'}| = c$$

relative to the grating.

If the grating moves only along the direction normal to its surface, its laboratory velocity components become

$$u_{x,\mathrm{lab}} = c\cos\theta'_m + v_g$$

and

$$u_{y,\mathrm{lab}} = c\sin\theta'_m$$

The laboratory propagation direction is therefore determined by

$$\tan\theta_{m,\mathrm{lab}} = \frac{u_{y,\mathrm{lab}}}{u_{x,\mathrm{lab}}}$$

or

$$\tan\theta_{m,\mathrm{lab}} = \frac{c\sin\theta'_m}{c\cos\theta'_m + v_g}$$

The direction defined by the grating equation and the direction measured in the laboratory therefore need not be numerically identical when the grating is moving.

This distinction is important. The grating equation determines the direction of the reconstructed wave relative to the grating, whereas the laboratory observes the propagation of that same electromagnetic entity from a different state of motion.

11.4 Role of Frequency and Wavelength

The sequence developed above separates the roles of frequency and wavelength.

The interaction frequency is established by the rate at which the incident structure reaches the grating,

$$f_1 = \frac{c \pm v}{\lambda}$$

The reconstructed wavelength is then established from

$$\lambda_1 = \frac{c}{f_1}$$

relative to the grating.

Finally, the diffraction direction follows from

$$d\sin\theta_m = m\lambda_1$$

The causal sequence proposed in this work is therefore

$$u_{\mathrm{int}} \longrightarrow f_1 \longrightarrow \lambda_1 \longrightarrow \theta_m$$

This is one of the central predictions of the model. A diffraction grating does not merely reveal a wavelength already present in the incident wave. When relative motion exists, the grating participates in establishing the wavelength that subsequently determines the diffraction pattern.

For a stationary grating,

v=0

and therefore

$$f_1 = f$$

$$\lambda_1 =$$

so that the conventional geometrical relation is recovered,

$$d\sin\theta_m = m$$

The distinction between preservation and reconstruction is therefore invisible when the source and grating are mutually stationary. It becomes experimentally relevant only when relative motion exists.

This property makes diffraction gratings particularly suitable for comparison with optical elements that preserve the existing spatial structure, such as prisms and Fabry–Pérot interferometers. The following section compares these different classes of optical interaction directly.

12. Direct Comparison of Optical Elements

The preceding sections considered four optical systems separately: a prism, a mirror, a Fabry–

Pérot interferometer, and a diffraction grating. Their comparison reveals that the essential difference is not whether the electromagnetic wave changes during the interaction, but **how** that change occurs.

The present model distinguishes between two general classes of optical interaction.

The first class preserves the organized spatial structure of the electromagnetic wave throughout the interaction. A prism continuously deforms the wave, while a mirror redirects it. A Fabry–Pérot interferometer repeatedly redirects the same organized structure.

The second class spatially disrupts the incident field. A diffraction grating interrupts the wave through alternating transmitting and blocking regions. The original ordered spatial structure is therefore not preserved continuously, and a new propagating structure must be established behind the grating.

The distinction can be summarized as

$$\begin{aligned}&\text{structure-preserving interaction}\\ &\neq \text{structure-reconstructing interaction}\end{aligned}$$

12.1 Prism

In a prism, the material parameters modify the propagation velocity,

$$u = \frac{1}{\sqrt{\varepsilon\mu}}$$

while the temporal periodicity remains continuous.

For a stationary prism,

$$f_{\text{inside}} = f$$

and

$$\lambda_{\text{inside}} = \frac{u}{f}$$

When the wave leaves the prism and returns to free space,

$$u \to c$$

and

$$\lambda_{\text{out}} \to \lambda$$

The prism therefore changes the wavelength temporarily but does not destroy the spatial organization from which the wavelength arises.

The physical sequence is

$$\begin{aligned}&\text{organized wave} \longrightarrow \text{continuous deformation}\\ &\longrightarrow \text{same organized wave}\end{aligned}$$

12.2 Mirror

An ideal mirror preserves the organized spatial structure while reversing its direction.

For a moving mirror, the interaction velocity differs from the original propagation velocity. For a mirror approaching the incident wave,

$$u_{\text{int}} = c + v$$

The wave is reflected without passing through a spatial reconstruction process.

Relative to the mirror, the incident and reflected structures satisfy

$$\lambda'_{\text{out}} = \lambda'_{\text{in}}$$

The physical sequence is therefore

$$\begin{aligned}&\text{organized wave} \longrightarrow \text{reflection}\\ &\longrightarrow \text{same organized structure}\end{aligned}$$

The laboratory propagation velocity and crossing frequency may change, but the wavelength is preserved through the reflection mechanism itself.

12.3 Fabry–Pérot Interferometer

The Fabry–Pérot interferometer extends the same principle to repeated reflections.

Its resonance condition is determined directly by the spatial periodicity of the electromagnetic wave,

$$2L\cos\theta = m$$

The interferometer therefore compares a geometrical path length with an already existing wavelength.

No reconstruction of the wavelength from a temporal frequency is required.

The process can be represented as

$$\text{organized wave} \longrightarrow \text{repeated reflection} \longrightarrow \text{interference of the preserved structure}$$

The Fabry–Pérot interferometer therefore acts as a direct probe of the spatial periodicity carried by the wave.

12.4 Diffraction Grating

A diffraction grating behaves differently because the incident field is spatially truncated by the grating transmission function.

Immediately behind the grating,

$$E_{\text{tr}}(x, y, t) = A(x, y)E_{\text{in}}(x, y, t)$$

The original continuous spatial structure is therefore replaced by a nonuniform transmitted field.

The process is

$$\text{organized wave} \longrightarrow \text{spatial disruption} \longrightarrow \text{reconstruction} \longrightarrow \text{new organized wave}$$

During this process, the temporal periodicity of the interaction is retained.

For a moving grating,

$$f_1 = \frac{c \pm v}{\lambda}$$

The reconstructed wave is then formed relative to the grating with

$$c = f_1\lambda_1$$

and therefore

$$\lambda_1 = \frac{c}{f_1}$$

Unlike the prism, mirror, and Fabry–Pérot interferometer, the grating therefore does not merely preserve or temporarily deform the existing wavelength. It establishes a new wavelength after the original spatial structure has been disrupted.

12.5 Preservation and Reconstruction of Wavelength

The fundamental distinction between the optical elements can now be expressed directly in terms of wavelength.

For the structure-preserving elements,

$$\lambda_{\text{after}} = \lambda_{\text{before}}$$

after the wave has returned to the same propagation medium, apart from temporary deformation inside a prism.

For the diffraction grating under relative motion,

$$\lambda_{\text{after}} = \lambda_1$$

with

$$\lambda_1 \neq$$

when

v\neq0

The difference does not originate from a different value of c assigned arbitrarily to different optical elements. It originates from whether the spatial organization of the incident electromagnetic structure survives the interaction.

This leads to the central classification:

$$\text{prism} \rightarrow \text{continuous deformation}$$

$$\text{mirror} \rightarrow \text{continuous redirection}$$

$$\text{Fabry--Pérot interferometer} \rightarrow \text{repeated structure-preserving reflection}$$

$$\text{diffraction grating} \rightarrow \text{spatial disruption and reconstruction}$$

12.6 Frequency Is Not the Same Quantity in Every Stage

The comparison also shows why the symbol f must be used carefully.

For the original wave in the laboratory,

$$f_{\text{lab}} = f$$

For the interaction with a moving optical element,

$$f_{\text{int}} = \frac{c \pm v}{\lambda}$$

These quantities need not be equal.

For a structure-preserving interaction, the interaction frequency describes how rapidly the existing wave structure reaches the optical element. It does not automatically become the defining frequency of a newly formed electromagnetic entity.

For a diffraction grating, however, the proposed reconstruction process assigns a special role to the interaction frequency:

$$f_{\text{new}} = f_{\text{int}}$$

relative to the grating.

The difference between optical elements therefore appears not in the existence of f_{int}—every moving optical element has an interaction frequency—but in what happens to the electromagnetic structure **after** that interaction.

12.7 Summary of the Four Optical Elements

The comparison may be condensed into the following physical sequence.

For the prism:

$$(f, \lambda) \longrightarrow \text{temporary deformation} \longrightarrow (f, \lambda)$$

For the mirror:

$$(f, \lambda) \longrightarrow \text{redirection of the preserved structure}$$

For the Fabry--Pérot interferometer:

$$(f, \lambda) \longrightarrow \text{multiple reflections of the preserved structure}$$

For the diffraction grating:

$$(f, \lambda) \longrightarrow f_{\text{int}} \longrightarrow \text{spatial reconstruction} \longrightarrow (f_{\text{int}}, \lambda_1)$$

relative to the grating.

The key experimentally accessible distinction is therefore

$$\text{preserved wavelength versus reconstructed wavelength}$$

This distinction provides the bridge between the theoretical model and measurable optical quantities. The following section therefore considers explicitly what values of frequency and wavelength should be obtained by different measurement methods when the source, observer, and optical system are in relative motion.

13. Predictions for Frequency and Wavelength Measurements

The previous sections distinguish between the frequency of an electromagnetic wave, the interaction frequency at a moving optical element, and the wavelength established by the optical interaction. These quantities lead to different experimental predictions depending on the type of optical instrument used.

The central purpose of the present section is therefore to separate two experimentally accessible quantities:

$$\text{f}$$

and

$$\lambda$$

and to determine what different optical systems are expected to measure when relative motion exists between the source, observer, and optical element.

13.1 Frequency Measurement by a Stationary Laboratory Observer

Consider first an electromagnetic wave produced by a source at rest in the laboratory system.

The emitted wave is characterized by

$$c = f\lambda$$

A laboratory observer at rest relative to the source measures

$$f_{\text{lab}} = f$$

and

$$\lambda_{\text{lab}} = \lambda$$

If an optical element moves relative to this wave, the frequency assigned to the incident light by the stationary laboratory observer does not change merely because the optical element moves.

Thus,

$$f_{\text{incident,lab}} = f$$

The moving optical element, however, interacts with the wave at a different temporal rate.

For motion toward the incoming wave,

$$f_{\text{int}} = f\left(1 + \frac{v}{c}\right)$$

and for motion away from the wave,

$$f_{\text{int}} = f\left(1 - \frac{v}{c}\right)$$

The distinction is therefore

$$f_{\text{lab}} \neq f_{\text{int}}$$

when

$$v \neq 0$$

The quantity f_{int} describes the optical interaction. It should not automatically be interpreted as the frequency measured by every observer.

13.2 Prediction for a Structure-Preserving Optical Element

For a prism, mirror, or Fabry–Pérot interferometer, the model assumes that the organized electromagnetic structure is preserved.

The wavelength carried by the wave therefore remains associated with the existing spatial structure.

After a prism returns the wave to the same propagation medium,

$$\lambda_{\text{out}} = \lambda$$

For an ideal mirror,

$$\lambda_{\text{reflected}} = \lambda$$

and for a Fabry--Pérot interferometer the resonance condition responds to the same spatial periodicity,

$$\lambda_{\text{FPI}} = \lambda$$

Thus, for structure-preserving optical systems, the predicted wavelength measurement is

$$\lambda_{\text{measured}} = \lambda$$

provided that the wave is measured after it has returned to the same external propagation medium.

The interaction frequency may differ from f, but the spatial structure itself is not reconstructed.

13.3 Prediction for a Diffraction Grating

A moving diffraction grating is predicted to behave differently.

For a grating moving toward the incident wave,

$$f_1 = f\left(1 + \frac{v}{c}\right)$$

The incident wavelength before reaching the grating remains

$$\lambda$$

but the spatial field structure is disrupted by the grating.

The temporal interaction rate f_1 is preserved through the reconstruction process, and the newly formed wave satisfies, relative to the grating,

$$c = f_1\lambda_1$$

Therefore,

$$\lambda_1 = \frac{c}{f_1}$$

and hence

$$\lambda_1 = \frac{\lambda}{1 + v/c}$$

For a grating moving away from the incident wave,

$$\lambda_1 = \frac{\lambda}{1 - v/c}$$

The essential prediction is therefore

$$\lambda_{\text{grating}} \neq \lambda_{\text{FPI}}$$

when relative motion is present.

For an approaching grating,

$$\lambda_{\text{grating}} = \frac{\lambda}{1 + v/c}$$

while the structure-preserving system measures

$$\lambda_{\text{FPI}} = \lambda$$

13.4 First-Order Prediction

For velocities much smaller than the speed of light,

$$\frac{v}{c} \ll 1$$

the reconstructed wavelength for an approaching grating can be approximated by

$$\lambda_1 \approx \lambda\left(1 - \frac{v}{c}\right)$$

For a receding grating,

$$\lambda_1 \approx \lambda\left(1 + \frac{v}{c}\right)$$

The predicted fractional wavelength difference is therefore approximately

$$\frac{\Delta\lambda}{\lambda} \approx \frac{v}{c}$$

in magnitude.

This is experimentally important because the predicted effect is first order in

$$\frac{v}{c}$$

rather than second order.

13.5 Frequency and Wavelength Need Not Give the Same Information

The proposed model therefore predicts that frequency and wavelength measurements can provide physically different information.

A stationary laboratory frequency measurement of the original incident wave gives

$$f_{\text{lab}} = f$$

while a diffraction grating moving relative to the wave responds to

$$f_{\text{int}} = f_1$$

and reconstructs

$$\lambda_1 = \frac{c}{f_1}$$

The two measurement paths are therefore

$$\text{frequency measurement} \longrightarrow f$$

and

$$\text{grating wavelength measurement} \longrightarrow \lambda_1$$

The model does not require

$$f\lambda_1 = c$$

in the laboratory system.

Instead, the relation

$$f_1\lambda_1 = c$$

belongs to the reconstructed wave in the grating system.

This distinction is one of the central predictions of the present work.

13.6 Comparison Between Fabry–Pérot and Diffraction-Grating Measurements

The most direct optical comparison is therefore between a Fabry–Pérot interferometer and a

diffraction grating observing the same radiation.

According to the present model, the Fabry–Pérot interferometer responds to the existing spatial periodicity,

$$\lambda_{\mathrm{FPI}} = \lambda$$

whereas the diffraction grating establishes a reconstructed wavelength,

$$\lambda_{\mathrm{DG}} = \lambda_1$$

For an approaching relative motion,

$$\lambda_{\mathrm{DG}} = \frac{\lambda}{1 + v/c}$$

Thus,

$$\frac{\lambda_{\mathrm{DG}}}{\lambda_{\mathrm{FPI}}} = \frac{1}{1 + v/c}$$

and for small v/c,

$$\frac{\lambda_{\mathrm{DG}} - \lambda_{\mathrm{FPI}}}{\lambda_{\mathrm{FPI}}} \approx -\frac{v}{c}$$

For receding relative motion,

$$\frac{\lambda_{\mathrm{DG}} - \lambda_{\mathrm{FPI}}}{\lambda_{\mathrm{FPI}}} \approx +\frac{v}{c}$$

The predicted sign therefore reverses when the direction of relative motion reverses.

14. Experimental Consequence: A Direct Test of Wavelength Preservation

The distinction developed in this article between spatial wavelength, temporal interaction frequency, and propagation velocity has consequences that extend beyond the interpretation of individual optical elements. If these quantities can change independently, then some established optical and astronomical measurements may require a different physical interpretation from the one normally assigned to them.

In conventional analysis, a measured spectral displacement is generally interpreted through the relation between frequency, wavelength, and the invariant vacuum propagation velocity. Within the present model, however, radial relative motion may change the rate at which the electromagnetic structure interacts with an observer or optical element without necessarily changing the spatial wavelength of the already-formed wave.

The central proposal can therefore be written as

$$\Delta\lambda_{\parallel} = 0$$

while the temporal interaction frequency may change,

$$\Delta f_{\mathrm{int}} \neq 0$$

with

$$f_{\mathrm{int}} = \frac{c \pm v_r}{\lambda_0}$$

within the present model.

If this distinction is physically correct, it may influence the interpretation of measurements in which astronomical light passes through diffraction gratings, interference filters, multilayer optical elements, or other structures before its spectral properties are determined. Such elements may not merely observe an unchanged incoming wave. They may participate in the formation of the optical state that is subsequently measured.

Consequently, a measurement that reports a Doppler-shifted wavelength after such an interaction does not, within the present model, automatically establish that the same spatial wavelength was already present in the freely propagating astronomical wave before it entered the instrument.

This possibility is potentially important because many established measurements were designed within a framework in which frequency, wavelength, and propagation

velocity are already connected by the conventional relation

$$c = f\lambda$$

and the measuring instrument is therefore not normally required to distinguish which of these quantities is directly responsible for the observed signal.

If the distinction proposed here is correct, the interpretation of some familiar measurements may therefore need to be reconsidered. This does not imply that the measurements themselves are incorrect. Their observed signals may remain entirely valid, while the physical process producing those signals could require a different interpretation.

Such a possibility, however, cannot remain only a conceptual hypothesis. The most fundamental prediction of the present model must be tested directly.

14.1. Direct Fabry–Pérot Test

A simple test can be designed around a classical Fabry–Pérot interferometer. The purpose of the experiment is not to determine the complete spectrum of a star, but to ask a much narrower question:

Does radial source motion change the spatial wavelength of the astronomical light arriving at the telescope?

To preserve the meaning of this test, the astronomical beam should reach the Fabry–Pérot etalon without first passing through a diffraction grating, interference prefilter, order-sorting filter, or another structured spectral-selection element whose interaction might modify or reconstruct the incoming electromagnetic structure.

The desired optical path is therefore conceptually simple:

astronomical source → telescope optics → collimation → classical Fabry–Pérot interferometer → detector

The Fabry–Pérot resonance condition at normal incidence is

$$2d = m\lambda$$

where d is the plate separation and m is the interference order.

Within standard optics, radial motion of the source produces a Doppler shift of the observed wavelength. For velocities much smaller than c,

$$\frac{\Delta\lambda}{\lambda} \approx \frac{\Delta v_r}{c}$$

The present model gives a different prediction for the physical wavelength of an already-formed freely propagating wave:

$$\Delta\lambda_{\|} = 0$$

The experiment therefore provides a direct distinction between the two descriptions.

14.2. A Double-Star Null Test

A particularly useful target is a double-lined binary system containing two similar stellar components whose radial velocities become large and opposite during part of the orbit.

Such a system provides several experimental advantages. Both components are observed through the same telescope, the same atmosphere, the same Fabry–Pérot interferometer, and at essentially the same time. If the stellar components have similar physical properties, their spectra are also broadly comparable.

Near conjunction, their relative radial velocity is small. Near quadrature, one component approaches while the other recedes, and their radial-velocity difference becomes large.

The experiment therefore contains its own natural control.

For two components A and B, conventional Doppler interpretation predicts

$$\Delta v_r \neq 0 \quad \Rightarrow \quad \lambda_A \neq \lambda_B$$

whereas the present model predicts, for the contribution caused purely by longitudinal relative motion,

$$\Delta v_r \neq 0 \quad \Rightarrow \quad \lambda_A = \lambda_B$$

or equivalently

$$\Delta\lambda_{\parallel} = 0$$

The measurement need not reconstruct the complete stellar spectrum. A scanning Fabry–Pérot interferometer can record the intensity variation as a function of plate separation,

I(d)

and the interferometric response can be compared at different orbital phases.

In the conventional description, the Fabry–Pérot pattern should change as the radial velocities of the two stellar components change.

Within the present model, radial motion alone should not produce the corresponding change in the directly observed spatial wavelength.

A suitable system with a relative radial velocity of order $200\,\mathrm{km\,s^{-1}}$ would provide a particularly large conventional prediction. At approximately $630\,\mathrm{nm}$,

$$\Delta\lambda \approx \lambda \frac{\Delta v_r}{c}$$

would give a separation of approximately

$$\Delta\lambda \approx 0.42\,\mathrm{nm}$$

for

$$\Delta v_r \approx 200\,\mathrm{km\,s^{-1}}$$

This is sufficiently large that the proposed measurement does not require an extreme-resolution Fabry–Pérot interferometer.

14.3. Significance of the Result

The importance of this experiment is not primarily instrumental. It is interpretational.

If the Fabry–Pérot measurement shows the wavelength displacement predicted by the conventional Doppler relation, then the assumption of wavelength preservation under radial motion used in the present model would be directly challenged.

If, however, the Fabry–Pérot response remains unchanged with respect to the spatial wavelength while the known radial motion of the stellar components changes strongly, then an important distinction would emerge between the spatial wavelength of the incoming wave and the Doppler information detected by conventional spectroscopic instruments.

Such a result would require reconsideration of measurements in which the incoming astronomical wave interacts with gratings, interference filters, or other structured optical elements before its wavelength is assigned.

The question would no longer be only whether a spectral shift is observed. The additional question would be:

At what stage of the optical interaction is the shifted spatial wavelength established?

That distinction is central to the separation between structure-preserving and structure-reconstructing optical interactions developed in this article.

The proposed double-star experiment therefore serves as a direct empirical test of one of the article's key assumptions. It prevents wavelength preservation from remaining merely a theoretical proposition.

At the same time, the experiment has a clear limitation. Even if wavelength preservation were observed, it would not by itself determine the propagation velocity of the incoming astronomical light. It would establish only that radial source motion does not produce the conventionally expected change in the directly measured spatial wavelength.

A further measurement would then be required to determine propagation velocity independently.

That problem is addressed in **Part C2 — Differential Measurement of the Propagation Velocity of Astronomical Light.**

15. Discussion

The analysis developed in this paper leads to a physical distinction between electromagnetic wave propagation and the observer-dependent description of that propagation.

The central concept is that an electromagnetic wave is treated as an organized physical field structure. Its wavelength describes the spatial periodicity of that structure, while its frequency describes the temporal periodicity associated with its propagation in the system in which the wave is established.

A moving observer may encounter the same spatial structure at a different rate. This modifies the temporal passage rate measured by that observer without requiring the electromagnetic structure itself to be physically reconstructed.

For an observer moving relative to the wave,

$$f_{\text{cross}} = \frac{u_{\text{cross}}}{\lambda}$$

where u_{cross} is the velocity with which the wave structure crosses the observer.

This distinction separates the physical electromagnetic entity from its observer-dependent description.

The purpose of the present work is not to replace relativistic coordinate transformations. Special relativity provides a mathematical framework for relating observations made in different inertial reference systems. The present analysis addresses a different question: what physically happens to the electromagnetic field when it interacts with different types of optical elements?

This question becomes important because optical elements do not interact with the spatial organization of the field in the same way.

A prism changes the propagation conditions through the material parameters

$$\varepsilon$$

and

$$\mu$$

which determine the local propagation velocity,

$$u = \frac{1}{\sqrt{\varepsilon\mu}}$$

The wave is continuously deformed while propagating through the material but remains an organized electromagnetic structure. When it returns to the original propagation medium, the original relation between frequency, wavelength, and propagation velocity is restored.

A mirror behaves differently from a prism but still preserves the organized structure. The incident field is redirected rather than spatially destroyed. For a moving mirror, the interaction velocity becomes

$$u_{\text{int}} = c \pm v$$

and the reflected wave preserves the incident electromagnetic structure relative to the mirror.

This leads, within the kinematic model used here, to a reflected propagation velocity in the laboratory frame

$$u_{\text{out}} = c \pm 2v$$

while the wavelength remains preserved through the reflection process,

$$\lambda_{\text{out}} = \lambda$$

The Fabry--Pérot interferometer belongs to the same general class. Its operation is based on repeated reflections of an already organized wave. The resonance condition depends directly on the spatial periodicity,

$$2L\cos\theta = m$$

and therefore provides a physical comparison between the existing wavelength and the geometrical dimensions of the interferometer.

The diffraction grating introduces a fundamentally different interaction.

The transmitted field immediately behind the grating is

$$E_{\mathrm{tr}}(x,y,t) = A(x,y)E_{\mathrm{in}}(x,y,t)$$

where the transmission function A(x,y) introduces strong spatial discontinuities.

The resulting electromagnetic field remains governed by Maxwell's equations, but the original ordered spatial structure is no longer preserved as a complete propagating wave.

At the same time, temporal periodicity survives the interaction.

For a moving grating, the relevant interaction frequency is

$$f_{\mathrm{int}} = \frac{c \pm v}{\lambda}$$

The central hypothesis of the present model is that this temporal periodicity survives the spatial disruption and becomes the frequency from which a new propagating structure is formed.

The new wavelength is then established relative to the grating through

$$\lambda_{\mathrm{new}} = \frac{c}{f_{\mathrm{int}}}$$

Thus, the diffraction grating differs from the prism, mirror, and Fabry--Pérot interferometer not simply because it changes the direction of propagation, but because it is proposed to destroy the existing ordered spatial structure and require reconstruction of a new one.

This distinction can be summarized as

$$\text{structure preservation}$$
$$\text{versus} \quad \text{structure reconstruction}$$

The consequence is experimentally important.

For structure-preserving systems,

$$\lambda_{\mathrm{out}} = \lambda_{\mathrm{in}}$$

after propagation returns to the same external medium.

For a moving diffraction grating,

$$\lambda_{\mathrm{out}} = \lambda_{\mathrm{new}}$$

with

$$\lambda_{\mathrm{new}} \neq \lambda$$

when relative motion is present.

This produces a direct difference between optical systems that are conventionally treated as equivalent wavelength-measuring devices.

The present model therefore separates three quantities that are frequently combined into a single description:

$$f$$

the frequency assigned to the propagating electromagnetic wave in its original system,

$$f_{\mathrm{int}}$$

the interaction frequency at a moving optical element,

and

$$\lambda_{\mathrm{new}}$$

the wavelength reconstructed when the original spatial structure is destroyed.

This separation is especially important for interpreting Doppler-type measurements. A change in the temporal rate at which a wave crosses an observer or an optical element does not necessarily imply that the physical wavelength carried by the original electromagnetic structure has changed.

Conversely, if an optical element destroys the spatial structure and reconstructs a new wave, the outgoing wavelength can differ from the incident wavelength even though the incoming wave itself was unchanged before reaching the element.

The same physical event may be described from different reference systems. These descriptions can assign different temporal rates and different coordinate velocities to the same underlying electromagnetic process. The present work therefore treats observer-dependent descriptions as descriptions of the event, not as separate physical electromagnetic entities.

This distinction is methodological rather than semantic. It allows the analysis to remain focused on the local physical interaction between the electromagnetic field and matter.

The predictions developed in this paper depend on one central physical assumption: a diffraction grating destroys the ordered spatial structure of the incident wave strongly enough that the wavelength of the outgoing propagating wave must be reconstructed.

This assumption is not derived completely from Maxwell's equations in the present work. Maxwell's equations describe the evolution of the transmitted field, including the strong spatial gradients created by the grating, but a complete quantitative theory of the transition from the disrupted near field to a newly organized localized electromagnetic structure remains to be developed.

The reconstruction region therefore represents the principal open theoretical problem of the present model.

The important point, however, is that this unresolved microscopic mechanism does not prevent the model from making a clear macroscopic prediction.

For relative motion,

$$f_{\text{int}} \neq f$$

and therefore

$$\lambda_{\text{new}} \neq \lambda$$

for a diffraction grating, whereas structure-preserving optical systems continue to respond to the existing wavelength.

The difference is first order in

$$\frac{v}{c}$$

for small relative velocities.

This makes the proposed distinction experimentally accessible.

The present paper intentionally stops at the theoretical comparison of optical interactions. A complete experimental program requires independent treatment of frequency, wavelength, and propagation velocity measurements. These questions are developed separately in Part C2, where the objective is to determine how the three quantities can be measured without assuming in advance that one must always be inferred from the other two.

The principal result of the present work is therefore not a new optical formula but a new physical distinction:

an optical element may preserve an electromagnetic structure or reconstruct it

If this distinction is experimentally confirmed, prism, mirror, Fabry--Pérot, and diffraction-grating measurements cannot automatically be regarded as equivalent descriptions of the same wavelength information. If no such difference is observed, the reconstruction hypothesis proposed here must be revised or rejected.

16. Conclusions

The present work has examined the interaction of electromagnetic waves with four different optical systems: a prism, a mirror, a Fabry–Pérot interferometer, and a diffraction grating.

The analysis is based on a distinction between the electromagnetic wave as a physical field structure and the observer-dependent rate at which that structure is encountered.

For an organized electromagnetic wave,

$$c = f\lambda$$

characterizes the relation between its temporal periodicity, spatial periodicity, and propagation velocity in the system in which the wave is established.

A moving observer or moving optical element may encounter the same spatial structure at a different rate. The corresponding crossing or interaction frequency is

$$f_{\mathrm{int}} = \frac{u_{\mathrm{int}}}{\lambda}$$

with

$$u_{\mathrm{int}} = c \pm v$$

for longitudinal relative motion.

This interaction frequency must be distinguished from the frequency assigned to the original propagating wave by a stationary observer.

The analysis further shows that different optical elements need not act on the electromagnetic structure in the same way.

A prism continuously modifies the propagation conditions through the material parameters

$$\varepsilon$$

and

$$\mu$$

without spatially destroying the organized electromagnetic field. The wavelength changes while the wave propagates inside the material, but the original free-space structure is restored after the wave leaves the prism.

An ideal mirror likewise preserves the organized electromagnetic structure. The wave is redirected rather than spatially fragmented. For a moving mirror, the interaction occurs with velocity

$$c \pm v$$

relative to the mirror, while the reflected wave preserves the incident spatial structure through the reflection process.

A Fabry–Pérot interferometer extends this structure-preserving mechanism through repeated reflections. Its resonance condition depends directly on the wavelength already carried by the electromagnetic wave,

$$2L\cos\theta = m$$

and therefore provides a direct comparison between the spatial periodicity of the wave and a geometrical length scale.

A diffraction grating is proposed to behave differently.

Its transmission function spatially interrupts the incident electromagnetic field,

$$E_{\mathrm{tr}}(x, y, t) = A(x, y)E_{\mathrm{in}}(x, y, t)$$

and produces a strongly nonuniform field behind the grating. The original ordered spatial structure is therefore not assumed to survive as a complete propagating wave.

The temporal periodicity of the interaction, however, remains available.

For a moving grating,

$$f_{\mathrm{int}} = \frac{c \pm v}{\lambda}$$

The central hypothesis of this work is that this temporal periodicity is preserved through the reconstruction process and determines the frequency of the newly formed wave.

Relative to the grating,

$$f_{\mathrm{new}} = f_{\mathrm{int}}$$

and

$$c = f_{\mathrm{new}}\lambda_{\mathrm{new}}$$

so that

$$\lambda_{\mathrm{new}} = \frac{c}{f_{\mathrm{int}}}$$

For a grating moving toward the incident wave,

$$\lambda_{\text{new}} = \frac{\lambda}{1 + v/c}$$

and for a grating moving away,

$$\lambda_{\text{new}} = \frac{\lambda}{1 - v/c}$$

The central physical distinction developed in this paper can therefore be expressed as

structure preservation
versus structure reconstruction

Prisms, mirrors, and Fabry–Pérot interferometers are treated as structure-preserving optical systems. A diffraction grating is treated as a structure-reconstructing system.

This distinction leads to a direct prediction:

$$\lambda_{\text{preserved}} \neq \lambda_{\text{reconstructed}}$$

when relative motion exists.

For

v=0

the difference disappears,

$$\lambda_{\text{new}} = \lambda$$

and the two classes of optical system become experimentally indistinguishable with respect to this effect.

The analysis also emphasizes that the same physical event may be described from different reference systems. These descriptions may assign different crossing frequencies and coordinate velocities to the same electromagnetic process. The present work therefore separates the physical interaction itself from its observer-dependent description, leaving the transformation between reference-system descriptions to the established relativistic formalism.

The principal open theoretical problem is the detailed electromagnetic evolution inside the reconstruction region behind a diffraction grating. Maxwell's equations determine the local field evolution, but a complete quantitative description of how the disrupted near field reorganizes into a new stable propagating structure remains to be developed.

Despite this open question, the model yields a clear qualitative and quantitative distinction between different optical interactions.

The main conclusion of this work is therefore:

not every optical element is required to preserve the same physical information carried by an electromagnetic wave

If the proposed distinction between structure preservation and structure reconstruction is experimentally confirmed, frequency and wavelength measurements obtained with different optical principles cannot automatically be regarded as equivalent.

The independent experimental measurement of frequency, wavelength, and propagation velocity is developed in Part C2.

References

[1] D. J. Griffiths, *Introduction to Electrodynamics*, 5th ed., Cambridge University Press, Cambridge, 2023.

[2] J. D. Jackson, *Classical Electrodynamics*, 3rd ed., John Wiley & Sons, New York, 1999.

[3] E. Hecht, *Optics*, 5th ed., Pearson, Harlow, 2017.

[4] M. Born and E. Wolf, *Principles of Optics: Electromagnetic Theory of Propagation, Interference and Diffraction of Light*, 7th ed., Cambridge University Press, Cambridge, 1999.

[5] C. Fabry and A. Pérot, “Sur l’application de phénomènes d’interférence à la solution de divers problèmes de spectroscopie et de métrologie,” *Bulletin Astronomique*, Vol. 16, pp. 5–32, 1899.

[6] A. Einstein, “Zur Elektrodynamik bewegter Körper,” *Annalen der Physik*, Vol. 17, pp. 891–921, 1905.